SUPPLEMENTAL RESTRAINT SYSTEM (SRS)
(If automatic transmission maintenance is required)

The VIGOR SRS includes a driver's side airbag, located in the steering wheel hub. In addition, the GS model has a front passenger's airbag located in the dashboard above the glove box. Information necessary to safely service the SRS is included in this Service Manual. Items marked with an asterisk (*) on the contents page include, or are located near, SRS components. Servicing, disassembling or replacing these items will require special precautions and tools, and should therefore be done by an authorized Acura dealer.

⚠WARNING

- **To avoid rendering the SRS inoperative, which could lead to personal injury or death in the event of a severe frontal collision, all maintenance must be performed by an authorized Acura dealer.**
- **Improper maintenance, including incorrect removal and installation of the SRS, could lead to personal injury caused by unintentional activation of the airbag (s).**
- **All SRS electrical wiring harnesses are covered with yellow outer insulation. Related components are located in the steering column, center console, dash, and dashboard lower panel, and in the dashboard above the glove box. Do not use electrical test equipment on these circuits.**

NOTE: The radio may have a coded theft protection circuit. Be sure to get the customer's code number before
– Disconnecting the battery.
– Removing the No. 39 (10 A) fuse in the under-hood fuse/relay box.
– Removing the radio.
After service, reconnect power to the radio and turn it on. When the word "CODE" is displayed, enter the customer's 5-digit code to restore radio operation.

Automatic Transmission

Special Tools 14-2

Description

Description 14-3
- Clutches 14-6
- Power Flow 14-9
- Electronic Control System 14-18
- Hydraulic Control 14-21
- Hydraulic Flow 14-27
- Lock-up System 14-37
- Parking Brake Mechanism 14-43

Electrical System

Circuit Diagram 14-44
Component Location 14-46
*Troubleshooting Procedures 14-47
Electrical Troubleshooting
- Symptom-to-Component Chart 14-50
- Troubleshooting Flowchart 14-52

*Transmission Control Module (TCM) 14-76
Mainshaft/Countershaft Speed Sensors 14-77
Lock-up Control Solenoid Valve A/B 14-78
Shift Control Solenoid Valve 14-80
Linear Solenoid 14-81
A/T Gear Position Switch 14-82

Hydraulic System

Hydraulic System
- Symptom-to-Component Chart 14-84

*Road Test 14-88
Stall Speed 14-90
Fluid Level 14-91
Pressure Testing 14-92
Lower Valve Body Assembly 14-97
Shift Control Solenoid Valve 14-100

Transmission

Transmission
- Removal 14-101

Illustrated Index
- Housing/Lower Valve Body 14-106
- Rear Cover 14-108
- Transmission Housing 14-110
- Torque Converter Housing/Valve Body 14-112

Transmission Housing/Lower Valve Body Assembly
- Removal 14-114

Rear Cover
- Removal 14-116

Transmission Housing
- Removal 14-118

Torque Converter Housing/Valve Body
- Removal 14-120

Lower Valve Body Assembly 14-122
Valve Body 14-123
Valve 14-124
Valve Caps 14-125
Main Valve Body 14-126
Servo Body 14-128
Regulator Valve Body 14-129
Oil Pump Body 14-130
Oil Pump 14-131
2nd Accumulator Body/Throttle Valve Body 14-132
Throttle Valve Body/Linear Solenoid 14-133
1st Accumulator/1st-hold Accumulator 14-134
Mainshaft 14-135
Countershaft 14-138
One-way Clutch/Parking Gear 14-141
Clutch
- Illustrated Index 14-142
- Disassembly 14-145
- Reassembly 14-147

1st-hold Clutch Bearing 14-151
Torque Converter Housing Bearings
- Mainshaft Bearing/Oil Seal Replacement 14-152
- Countershaft Bearing Replacement 14-153

Transmission Housing Bearings 14-153
Extension Shaft 14-154
Secondary Driven Gear Shaft Oil Seal 14-154
Tapered Roller Bearing 14-155
Oil Seal
- Removal 14-156

Bearing Outer Race 14-156
Tapered Roller Bearing Preload 14-158
Oil Seal
- Installation 14-159

Reverse Idler Gear 14-160
Parking Brake Roller Rod 14-161
Control Shaft/Detent Spring 14-162
Transmission
- Reassembly 14-164

Torque Converter 14-172
Transmission
- Installation 14-173
- Cooler Flushing 14-178

*Gearshift Selector 14-180
*Shift Cable
- Removal/Installation 14-181
- Adjustment 14-182

*A/T Gear Position Indicator Panel 14-184

Special Tools

Ref No.	Tool Number	Description	Qty	Page Reference
①	07GAB–PF50100	Mainshaft Holder	1	14-117, 169
②	07GAD–SD40101	Attachment, 78 x 90 mm	1	14-157
③	07GAE–PG40200	Clutch Spring Compressor Bolt Assembly	1	14-145, 148
④	07HAC–PK4010A	Housing Puller	1	14-119
⑤	07HAE–PL50100	Clutch Spring Compressor Attachment	1	14-145, 148
⑥	07LAC–PW50101	Extension Shaft Puller	1	14-102
⑦	07LAD–PW50500	Pinion Cover Driver Attachment	1	14-159
⑧	07LAD–PW50601	Attachment, 40 x 50 mm	1	14-155,159
⑨	07LAE–PX40100	Clutch Spring Compressor Attachment	1	14-145, 148
⑩	07LAJ–PT3010A	Test Harness	1	14-49, 88
⑪	07MAJ–PY4011A	A/T Oil Pressure Hose, 2210 mm	4	14-92
⑫	07MAJ–PY40120	A/T Oil Pressure Hose Adapter	4	14-92
⑬	07406–0020400	A/T Oil Pressure Gauge Set W/Panel	1	14-92
⑭	07406–0070300	A/T Low Pressure Gauge W/Panel	1	14-92
⑮	07736–A01000A	Adjustable Bearing Puller, 25–40 mm	1	14-153
⑯	07746–0010300	Attachment, 42 x 47 mm	1	14-154
⑰	07746–0010500	Attachment, 62 x 68 mm	1	14-152, 153
⑱	07746–0010600	Attachment, 72 x 75 mm	1	14-152, 157
⑲	07746–0030100	Driver I.D. 40 mm	1	14-151
⑳	07749–0010000	Driver	1	14-152, 153, 154, 157
㉑	07947–6340500	Attachment	1	14-152
㉒	J 38405–A	Transmission Cooler Flusher	1	14-178
㉓	KS–AHM–32–003	Digital Multimeter	1	14-49, 88

⑮ must be used with commercially available 3/8 x 16 threads/in slide hammer.

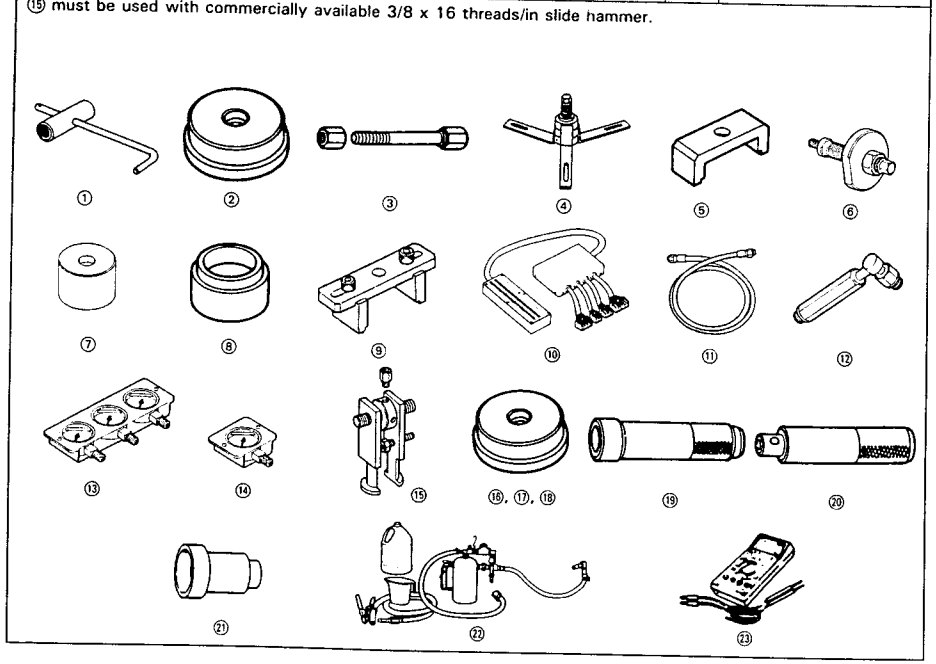

Description

The automatic transmission is a combination of a 3-element torque converter and a dual-shaft electronically controlled automatic transmission which provides 4 speeds forward and 1 reverse. The entire unit is positioned in line with the engine.

Torque Converter, Gears and Clutches

The torque converter consists of a pump, turbine and stator, assembled in a single unit.
They are connected to the engine crankshaft so they turn together as a unit as the engine turns.
Around the outside of the drive plate is a ring gear which meshes with the starter pinion when the engine is being started.
The entire torque converter assembly serves as a flywheel while transmitting power to the transmission mainshaft.
The transmission has two parallel shafts, the mainshaft and the countershaft. The mainshaft is in line with the engine crankshaft.
The mainshaft includes the clutches for 1st, 2nd and 4th, and gears for 4th, 2nd, 1st and reverse (3rd gear is integral with the mainshaft, while the reverse gear is integral with 4th gear).
The countershaft includes the clutches for 3rd, and 1st-hold, and gears for 3rd, 4th, 1st, 2nd, reverse and parking. The secondary drive gear is integrated with the countershaft.
The gears on the mainshaft are in constant mesh with those on the countershaft.
When certain combinations of gears in the transmission are engaged by clutches, power is transmitted from the mainshaft to the countershaft to provide [1], [2], [D3], [D4], and [R] positions.

Electronic Control

The electronic control system consists of the Transmission Control Module (TCM), sensors, a linear solenoid and four solenoid valves. Shifting and lock-up are electronically controlled for comfortable driving under all conditions.
The TCM is located behind the glove box on the passenger's side.

Hydraulic Control

The lower valve body assembly includes the main valve body, servo body and shift control solenoid valves. They are bolted on the lower part of the transmission housing.
Other valve bodies, the regulator valve body, oil pump body, 2nd accumulator body, and throttle valve body, are bolted to the torque converter housing.
The main valve body contains the manual valve, 1–2 shift valve, 2–3 shift valve, 3–4 shift valve, 4th kick-down valve, 3rd kick-down valve, 2–3 orifice control valve, 3–4 orifice control valve, 4th exhaust valve, servo control valve, and Clutch Pressure Control (CPC) valve.
The servo body contains the servo valve, 3rd and 4th accumulator pistons.
The regulator valve body contains the regulator valve, lock-up shift valve, and cooler relief valve.
Fluid from the regulator passes through the manual valve to the various control valves.
The throttle valve body includes the throttle valve which is bolted onto the 2nd accumulator body. The 2nd accumulator piston is assembled in the 2nd accumulator body.
The linear solenoid is joined the throttle valve body.
The oil pump body contains the modulator valve, lock-up control valve, lock-up timing valve, and relief valve.
The torque converter check valve is located in the torque converter hausing under the oil pump body.
The 1st and 1st-hold accumulator pistons are assembled in the rear cover.
The 1st, 1st-hold, 3rd, and 4th clutches receive oil from their respective feed pipes.

Shift Control Mechanism

Input from various sensors located throughout the car determines which shift control solenoid valve the TCM will activate. Activating a shift control solenoid valve changes modulator pressure, causing a shift valve to move. This pressurizes a line to one of the clutches, engaging that clutch and its corresponding gear.

Lock-up Mechanism

In [D4] position, in 2nd, 3rd and 4th, and in [D3] position in 3rd, pressurized fluid is drained from the back of the torque converter through an oil passage, causing the lock-up piston to be held against the torque converter cover. As this takes place, the mainshaft rotates at the same speed as the engine crankshaft. Together with hydraulic control, the TCM optimizes the timing of the lock-up mechanism. The lock-up valves control the range of lock-up according to lock-up control solenoid valves A and B, and throttle valve. When lock-up control solenoid valves A and B activate, modulator pressure changes. The lock-up control solenoid valves A and B are mounted on the torque converter housing, and are controlled by the TCM.

(cont'd)

Description

(cont'd)

Gear Selection

The selector lever has seven positions; [P] PARK, [R] REVERSE, [N] NEUTRAL, [D4] 1st through 4th positions, [D3] 1st through 3rd positions, [2] 2nd gear and [1] 1st gear.

Position	Description
[P] PARK	Front wheels locked; parking pawl engaged with parking gear on countershaft. All clutches released.
[R] REVERSE	Reverse; reverse selector engaged with countershaft reverse gear and 4th clutch locked.
[N] NEUTRAL	All clutches released.
[D4] DRIVE (1st through 4th)	General driving; starts off in 1st, shifts automatically to 2nd, 3rd, then 4th, depending on vehicle speed and throttle position. Downshifts through 3rd, 2nd and 1st on deceleration to stop. The lock-up mechanism comes into operation in 2nd, 3rd and 4th speeds when the transmission in [D4] position.
[D3] DRIVE (1st through 3th)	For rapid acceleration at highway speeds and general driving; starts off in 1st, shifts automatically to 2nd then 3rd, depending on vehicle speed and throttle position. Downshifts through lower gears on deceleration to stop. Under certain conditions, the lock-up mechanism will operate in the [D3] position.
[2] SECOND	Driving in 2nd gear; stays in 2nd gear, does not shift up and down. For engine braking or better traction starting off on loose or slippery surface.
[1] FIRST	Driving in 1st gear; stays in 1st gear, does not shift up. For engine braking.

Starting is possible only in [P] and [N] positions through use of a slide-type, neutral-safety switch.

Automatic Transaxle (A/T) Gear Position Indicator

The A/T gear position indicator in the instrument panel shows what gear has been selected without having to look down at the console.

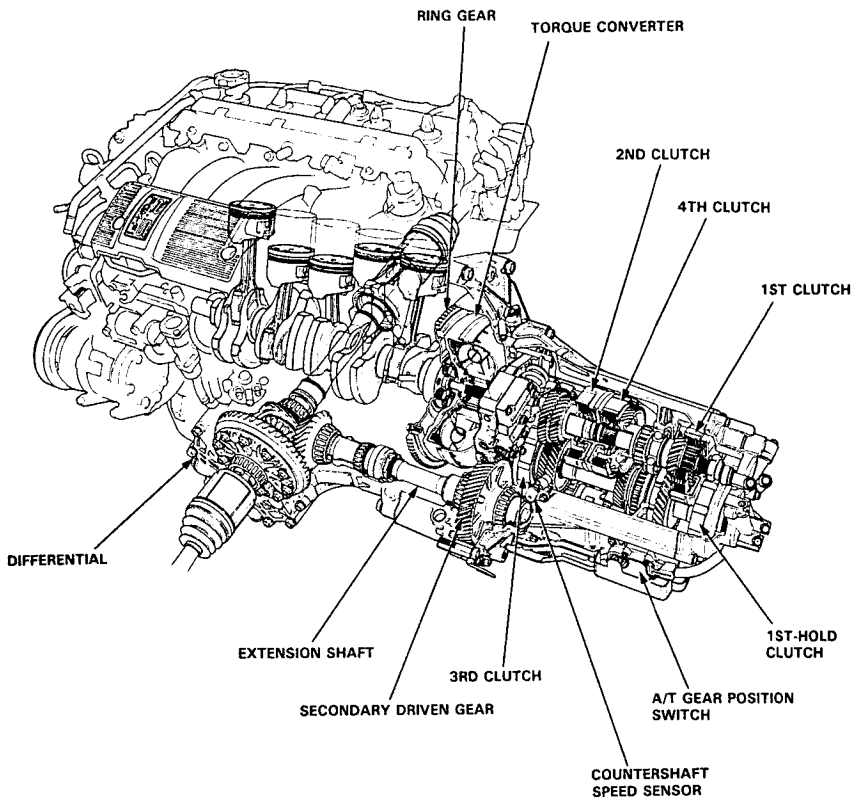

Description

Clutches

The four speed automatic transmission uses hydraulically actuated clutches to engage or disengage the transmission gears. When clutch pressure is introduced into the clutch drum, the clutch piston is applied. This presses the friction discs and steel plates together, locking them so they don't slip. Power is then transmitted through the engaged clutch pack to its hub-mounted gear.

Likewise, when clutch pressure is bled from the clutch pack, the piston releases the friction discs and steel plates, and they are free to slide past each other while disengaged. This allows the gear to spin independently of its shaft, transmitting no power.

1st Clutch
The 1st clutch engages/disengages 1st gear, and is located at the end of the mainshaft, just behind the rear cover. The 1st clutch is supplied clutch pressure by its oil feed pipe within the mainshaft.

1st-hold Clutch
The 1st-hold clutch engages/disengages 1st-hold or [1] position, and is located at the end of the countershaft, just behind the rear cover. The 1st-hold clutch is supplied clutch pressure by its oil feed pipe within the countershaft.

2nd Clutch
The 2nd clutch engages/disengages 2nd gear, and is located at the center of the mainshaft. The 2nd clutch is joined back-to-back to the 4th clutch. The 2nd clutch is supplied clutch pressure through the mainshaft by a circuit connected to the regulator valve body.

3rd Clutch
The 3rd clutch engages/disengages 3rd gear, and is located at the end of the countershaft, opposite the rear cover. The 3rd clutch is supplied clutch pressure by its oil feed pipe within the countershaft.

4th Clutch
The 4th clutch engages/disengages 4th gear, as well as reverse gear, and is located at the center of the mainshaft. The 4th clutch is joined back-to-back to the 2nd clutch. The 4th clutch is supplied clutch pressure by its oil feed pipe within the mainshaft.

One-way Clutch
The one-way clutch is positioned between the parking gear and countershaft 1st gear, with the parking gear splined to the countershaft. Countershaft 1st gear provides the outer race surface, and the parking gear provides the inner race surface. The one-way clutch locks up when power is transmitted from the mainshaft 1st gear to the countershaft 1st gear. The 1st clutch and gears remain engaged in the 1st, 2nd, 3rd, and 4th gear positions in the [D4], [D3] or [2] position. However, the one-way clutch disengages when the 2nd, 3rd, or 4th clutches /gears are applied in the [D4], [D3] or [2] position. This is because the increased rotational speed of the gears on the countershaft over-ride the locking "speed range" of the one-way clutch. Thereafter, the one-way clutch free-wheels with the 1st clutch still engaged.

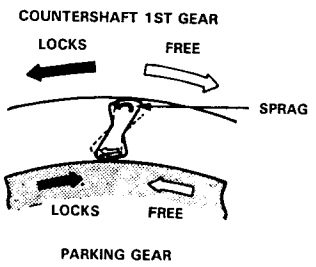

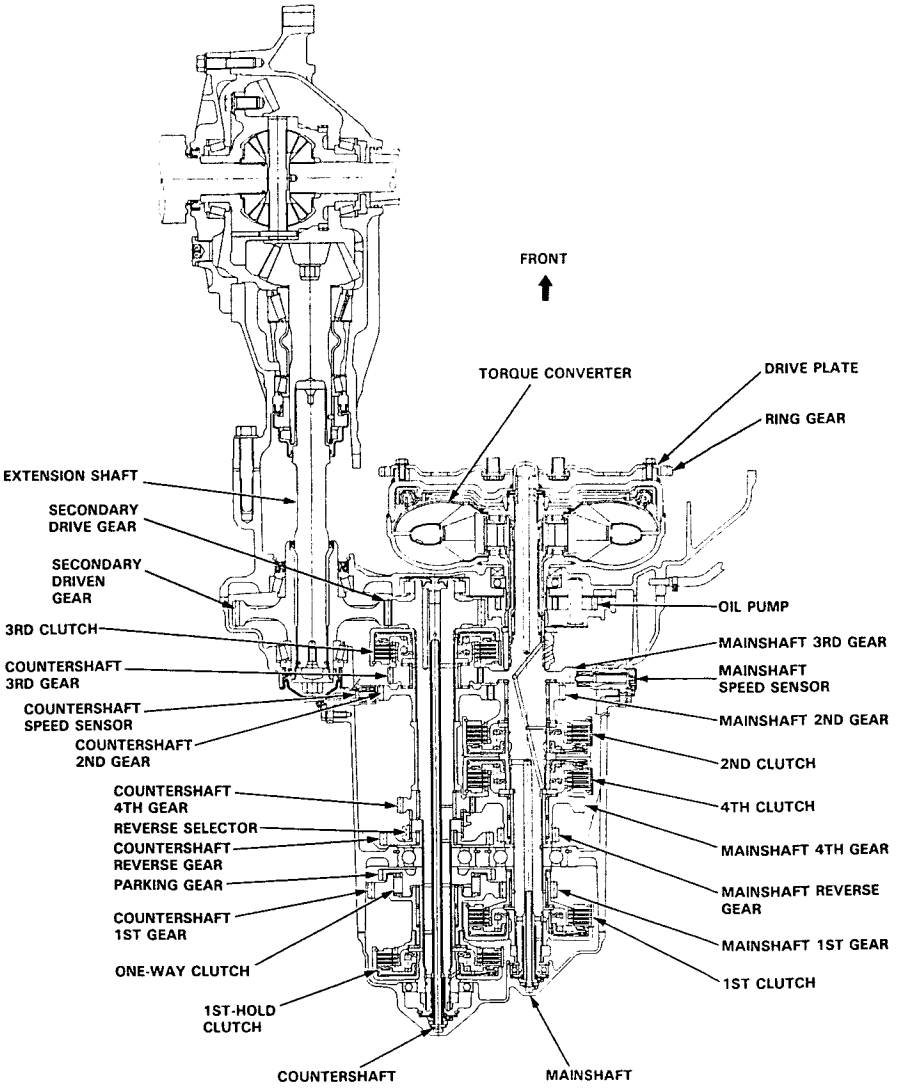

(cont'd)

Description

Clutches (cont'd)

Lock-up Clutch

1. Operation (clutch on)

With the lock-up clutch on, the oil in the chamber between the torque converter cover and lock-up piston is discharged, and the converter oil exerts pressure through the piston against the converter cover. As a result, the converter turbine is locked on the converter cover. The effect is to bypass the converter, thereby placing the car in direct drive.

Power flow

The power flows by way of:

Engine
↓
Drive plate
↓
Torque converter cover
↓
Lock-up piston
↓
Damper spring
↓
Turbine
↓
Mainshaft

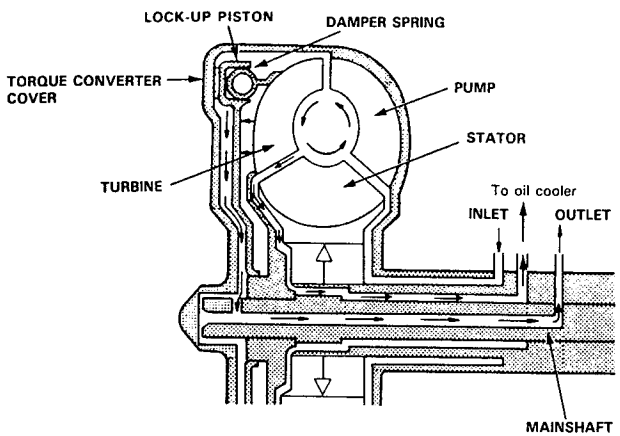

2. Operation (clutch off)

With the lock-up clutch off, the oil flows in the reverse of CLUTCH ON. As a result, the lock-up piston is moved away from the converter cover; that is, the torque converter lock-up is released.

Power flow

Engine
↓
Drive plate
↓
Torque converter cover
↓
Pump
↓
Turbine
↓
Mainshaft

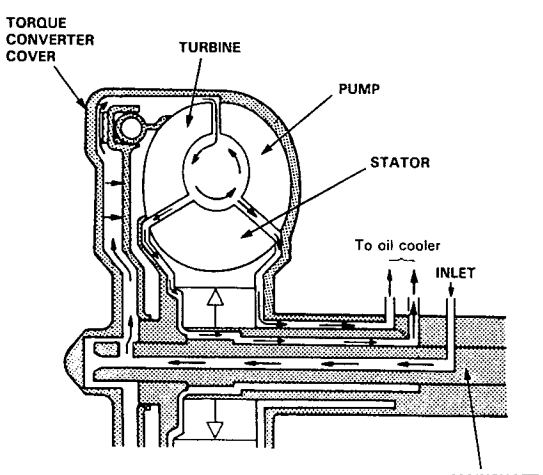

Power Flow

PART / POSITION		TORQUE CONVERTER	1ST-HOLD CLUTCH	1ST GEAR 1ST CLUTCH	2ND GEAR 2ND CLUTCH	3RD GEAR 3RD CLUTCH	4TH		REVERSE GEAR	PARKING GEAR
							GEAR	CLUTCH		
P		O	×	×	×	×	×	×	×	O
R		O	×	×	×	×	×	O	O	×
N		O	×	×	×	×	×	×	×	×
D4	1ST	O	×	O	×	×	×	×	×	×
	2ND	O	×	O*	O	×	×	×	×	×
	3RD	O	×	O*	×	O	×	×	×	×
	4TH	O	×	O*	×	×	O	O	×	×
D3	1ST	O	×	O	×	×	×	×	×	×
	2ND	O	×	O*	O	×	×	×	×	×
	3RD	O	×	O*	×	O	×	×	×	×
2		O	×	O*	O	×	×	×	×	×
1		O	O	O	×	×	×	×	×	×

O: Operates, ×: Doesn't operate, *: Although the 1st clutch engages, driving power is not transmitted because the one-way clutch slips.

N Position

The hydraulic pressure is not applied to the clutches. Power is not transmitted to the countershaft.

P Position

The hydraulic pressure is not applied to the clutches. Power is not transmitted to the countershaft.
The countershaft is locked by the parking pawl interlocking the parking gear.

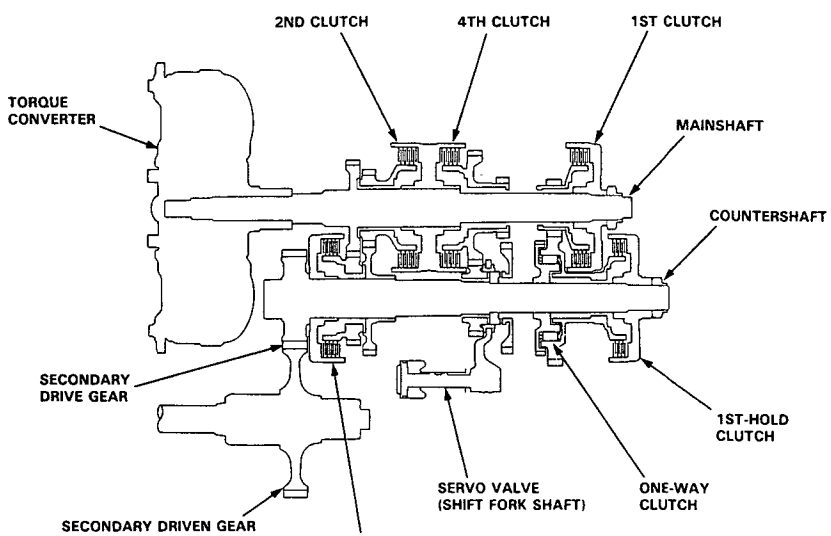

(cont'd)

Description

– Power Flow (cont'd)

[1] Position

At [1] position, hydraulic pressure is applied to the 1st clutch and 1st-hold clutch.

The power flow when accelerating is as follows:

1. The hydraulic pressure is applied to the 1st clutch on the mainshaft and power is transmitted via the 1st clutch to the mainshaft 1st gear.
2. The hydraulic pressure is also applied to the 1st-hold clutch on the countershaft. The power transmitted to the mainshaft 1st gear is conveyed via the countershaft 1st gear to the one-way clutch and the 1st-hold clutch. The one-way clutch is used to drive the countershaft, and the 1st-hold clutch drives the countershaft.
3. The power is transmitted to the secondary drive gear and drives the secondary driven gear.

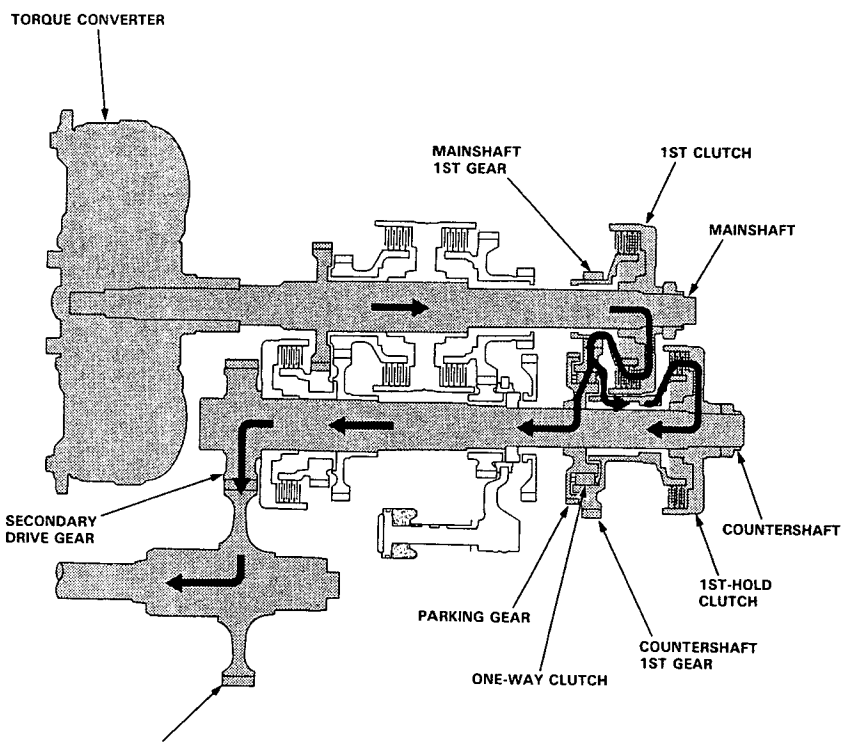

[1] Position

The power flow when decelerating is as follows:

1. Rolling resistance from the road surface goes through the front wheels to the secondary drive gear, then to the countershaft 1st gear via the 1st-hold clutch which is applied during deceleration.
2. The one-way clutch becomes free at this time because the countershaft torque reverses.
3. The counterforce conveyed to the countershaft 1st gear turns the mainshaft 1st gear. At this time, since hydraulic pressure is also applied to the 1st clutch, counterforce is also transmitted to the mainshaft. As a result, engine braking can be obtained with 1st gear.

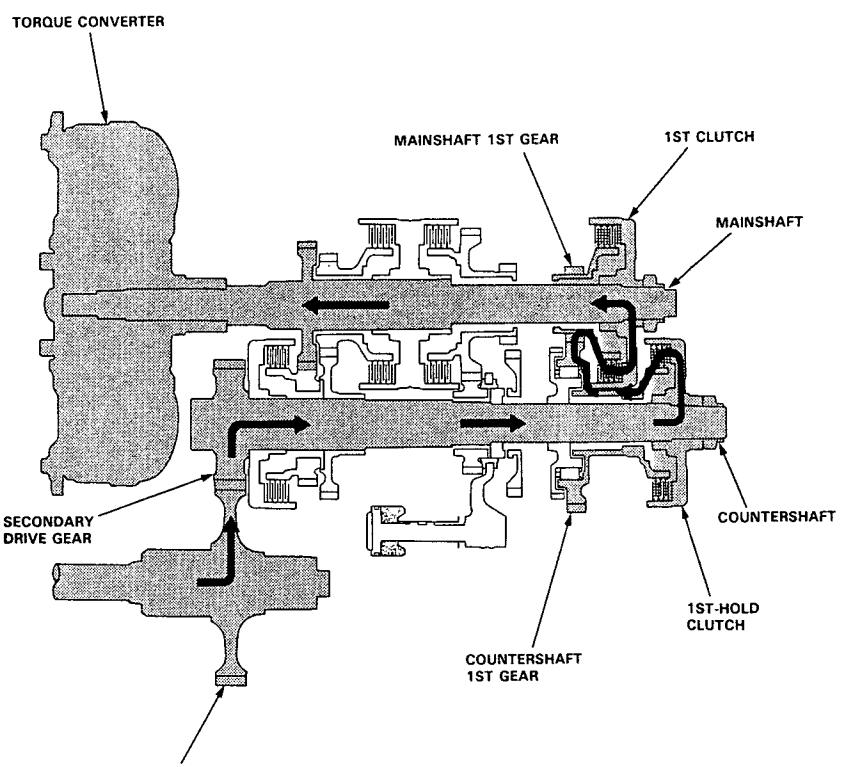

(cont'd)

Description

Power Flow (cont'd)

[2] Position

[2] Position is provided to drive only in 2nd speed.

1. The hydraulic pressure is applied to the 2nd clutch on the mainshaft and power is transmitted via the 2nd clutch to the mainshaft 2nd gear.
2. The power transmitted to the mainshaft 2nd gear is conveyed via the countershaft 2nd gear, and drives the countershaft.
3. The power is transmitted to the secondary drive gear and drives the secondary driven gear.

   NOTE: The hydraulic pressure is also applied to the 1st clutch, but since the rotation speed of the 2nd gear exceeds that of 1st gear, power from 1st gear is cut off at the one-way clutch.

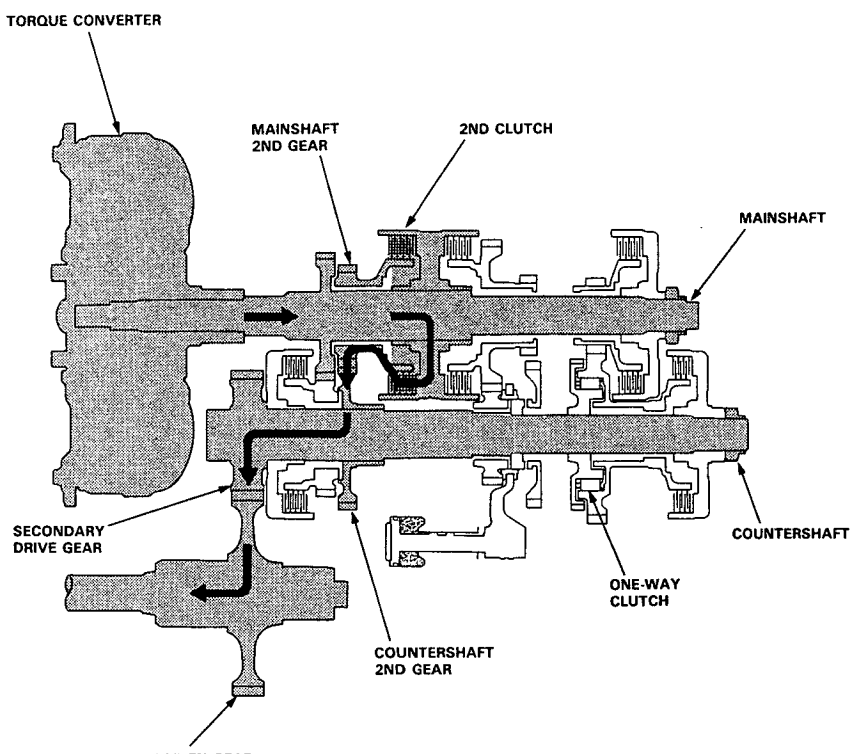

In [D4] or [D3] position, the optimum gear is automatically selected from 1st, 2nd, 3rd and 4th speeds, according to conditions such as the balance between throttle opening (engine load) and vehicle speed.

[D4] or [D3] Position, 1st speed

1. The hydraulic pressure is applied to the 1st clutch, which rotates together with the mainshaft, and the mainshaft 1st gear rotates.
2. The power is transmitted to the countershaft 1st gear, and drives the countershaft via the one-way clutch.
3. The power is transmitted to the secondary drive gear and drives the secondary driven gear.

   NOTE: In [D4] or [D3] position, the hydraulic pressure is not applied to the 1st-hold clutch.

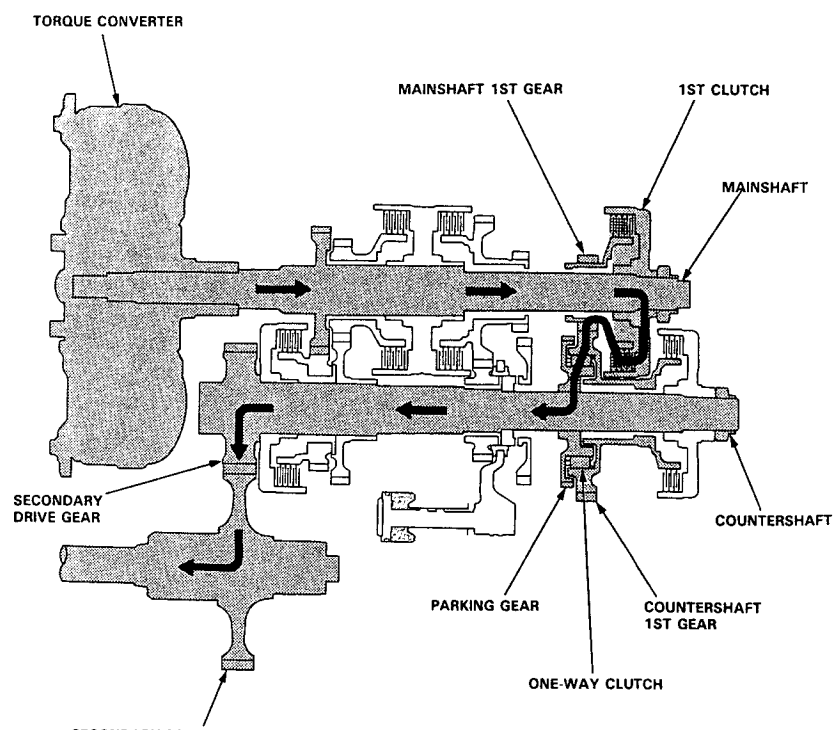

(cont'd)

Description

Power Flow (cont'd)

D4 or D3 Position, 2nd speed

1. The hydraulic pressure is applied to the 2nd clutch, which rotates together with the mainshaft, and the mainshaft 2nd gear rotates.
2. The power is transmitted to the countershaft 2nd gear, and drives the countershaft.
3. The power is transmitted to the secondary drive gear and drives the secondary driven gear.

NOTE: In D4 or D3 position, 2nd speed, the hydraulic pressure is also applied to the 1st clutch, but since the rotation speed of 2nd gear exceeds that of 1st gear, power from 1st gear is cut off at the one-way clutch.

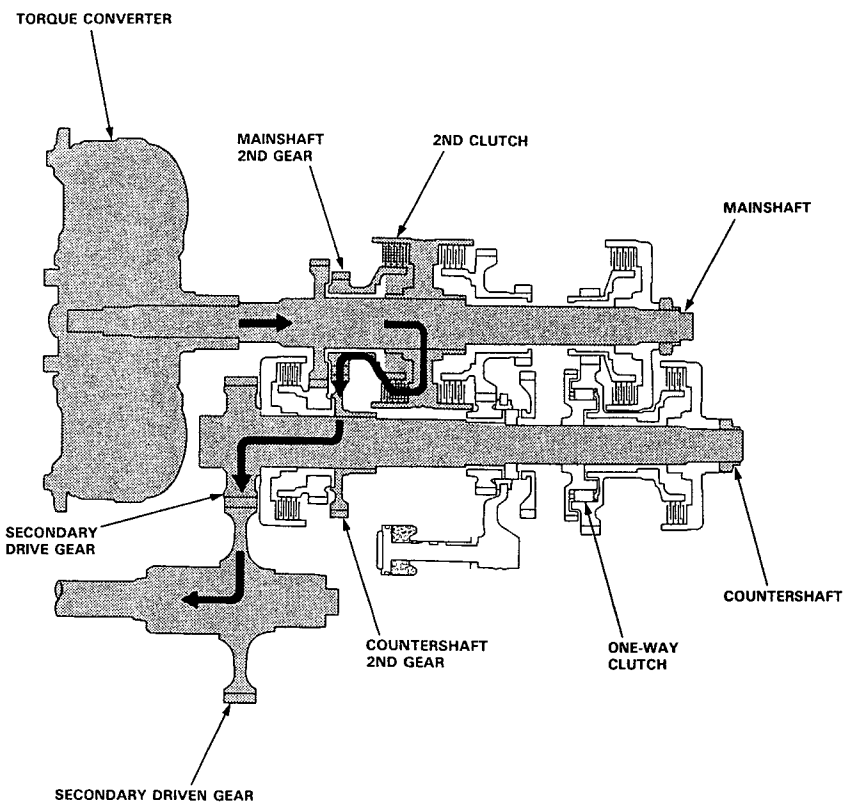

D4 or D3 Position, 3rd speed

1. The hydraulic pressure is applied to the 3rd clutch. The power from mainshaft 3rd gear is transmitted to the countershaft 3rd gear.
2. The power is transmitted to the secondary drive gear and drives the secondary driven gear.

NOTE: In D4 or D3 position, 3rd speed, the hydraulic pressure is also applied to the 1st clutch, but since the rotation speed of 3rd gear exceeds that of 1st gear, power from 1st gear is cut off at the one-way clutch.

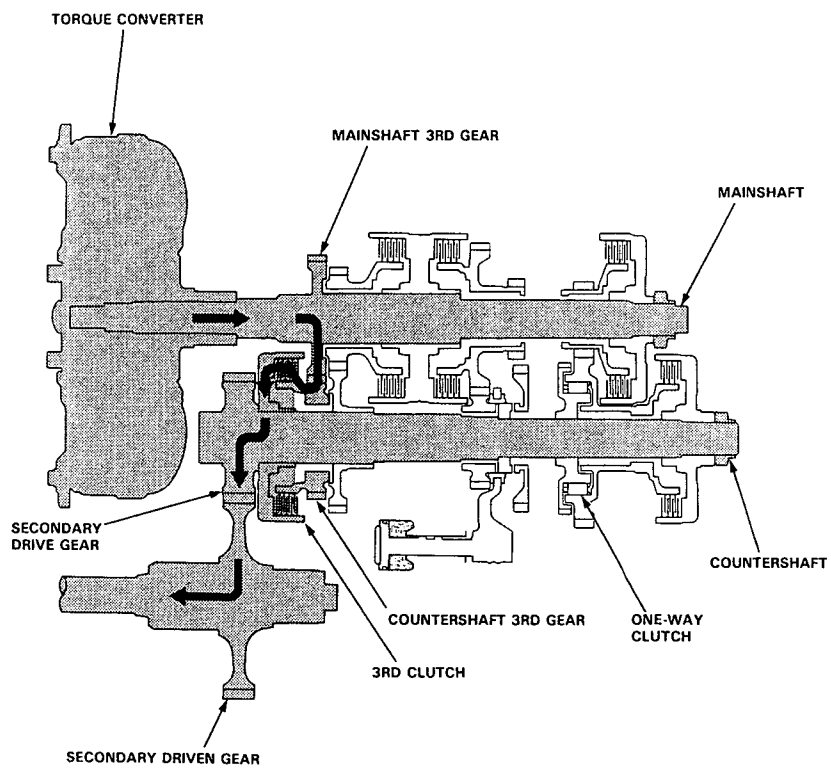

(cont'd)

Description

Power Flow (cont'd)

D4 Position, 4th speed

1. The hydraulic pressure is applied to the 4th clutch, which rotates together with the mainshaft, and the mainshaft 4th gear rotates.
2. The power is transmitted to the countershaft 4th gear, and drives the countershaft.
3. The power is transmitted to the secondary drive gear and drives the secondary driven gear.

NOTE: In D4 position, 4th speed, the hydraulic pressure is also applied to the 1st clutch, but since the rotation speed of 4th gear exceeds that of 1st gear, power from 1st gear is cut off at the one-way clutch.

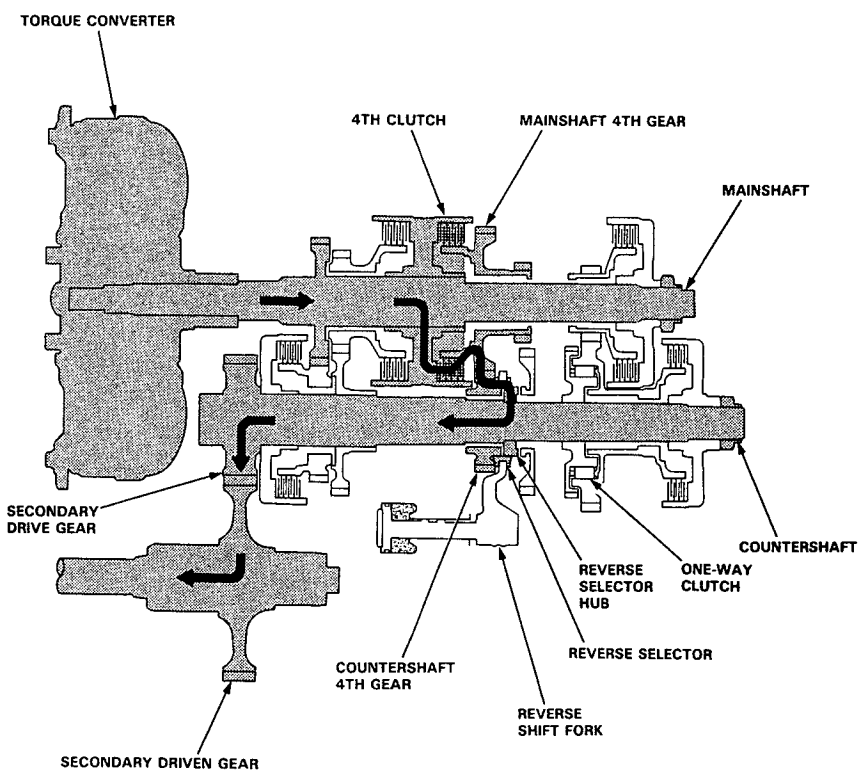

R Position

1. The hydraulic pressure is switched by the manual valve to the servo valve, which moves the reverse shift fork to the reverse position. The reverse shift fork engages with the reverse selector, reverse selector hub and the countershaft reverse gear.
2. The hydraulic pressure is also applied to the 4th clutch. The power is transmitted from the mainshaft reverse gear via the reverse idler gear to the countershaft reverse gear.
3. The rotation direction of the countershaft reverse gear is changed via the reverse idler gear.
4. The power is transmitted to the secondary drive gear and the secondary driven gear.

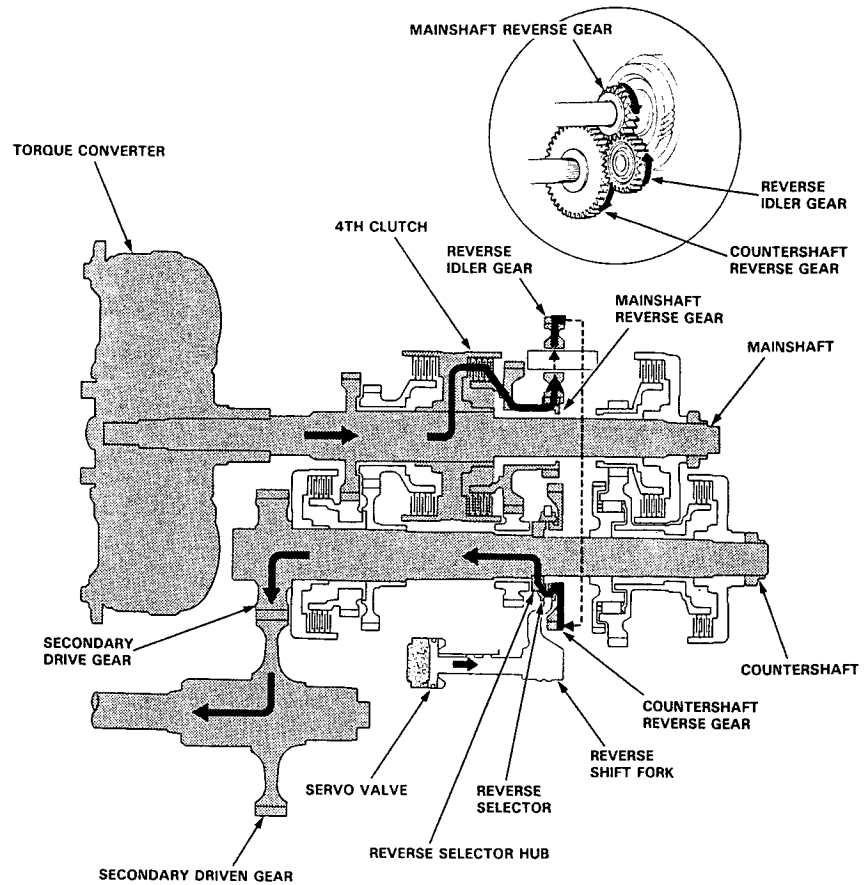

Description

Electronic Control System

Electronic Control System
The electronic control system consists of the Transmission Control Module (TCM), sensors, a linear solenoid and four solenoid valves. Shifting and lock-up are electronically controlled for comfortable driving under all conditions.
The TCM is located behind the glove box on the passenger's side.

Shift control
Shifting is related to engine torque through the linear solenoid used to operate throttle valve which is controlled by the TCM. Getting a signal from each sensor, the TCM determines the appropriate shift point and activates shift control solenoid valves A and/or B.
The combination of driving signals to shift control solenoid valves A and B is shown in the table below.

Shift control solenoid valve / Position (gear)	A	B
1 (1ST)	ON	OFF
2 (2ND)	OFF	OFF
D4 D3 (1ST)	OFF	ON
D4 D3 (2ND)	ON	ON
D4 D3 (3RD)	ON	OFF
D4 (4TH)	OFF	OFF
R (REVERSE)	OFF	OFF

Lock-up control
From sensor input signals, the TCM determines whether to turn the lock-up ON or OFF and activates lock-up control solenoid valve A and/or B accordingly.
The combination of driving signals to lock-up control solenoid valves A and B is shown in the table below.

Lock-up Control Solenoid Valve / Lock-up condition	A	B
Lock-up OFF	OFF	OFF
Lock-up, slight	ON	OFF
Lock-up, half	ON	ON
Lock-up, full	ON	ON
Lock-up during deceleration	ON	Duty operation OFF ⟶ ON

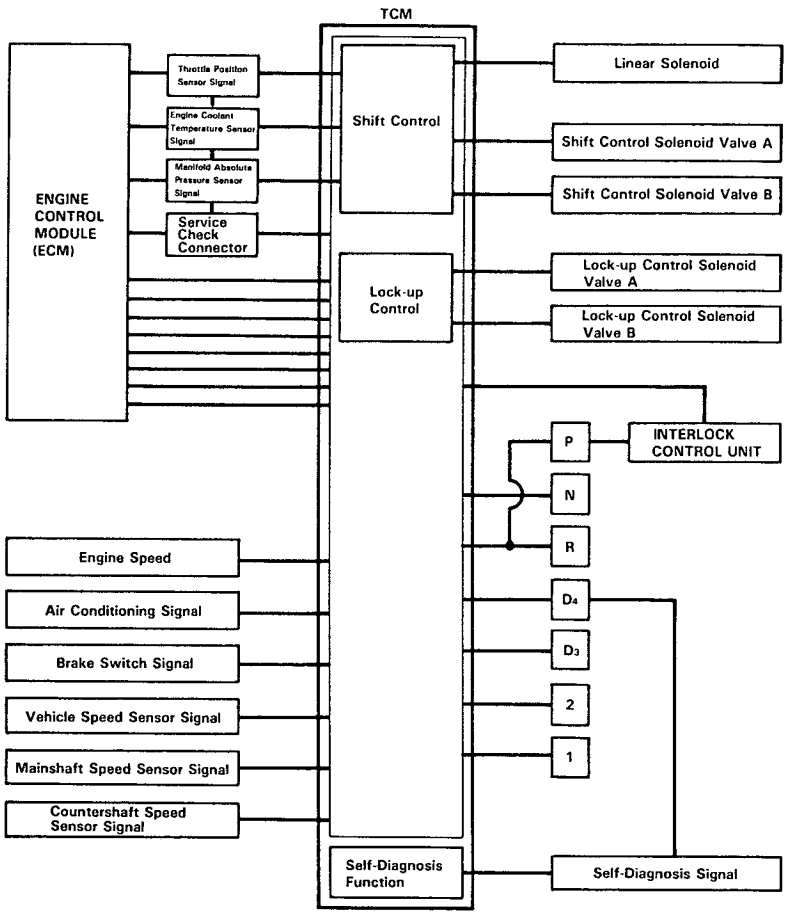

(cont'd)

Description

- Electrical Control System (cont'd)

Circuit Diagram and Terminal Location

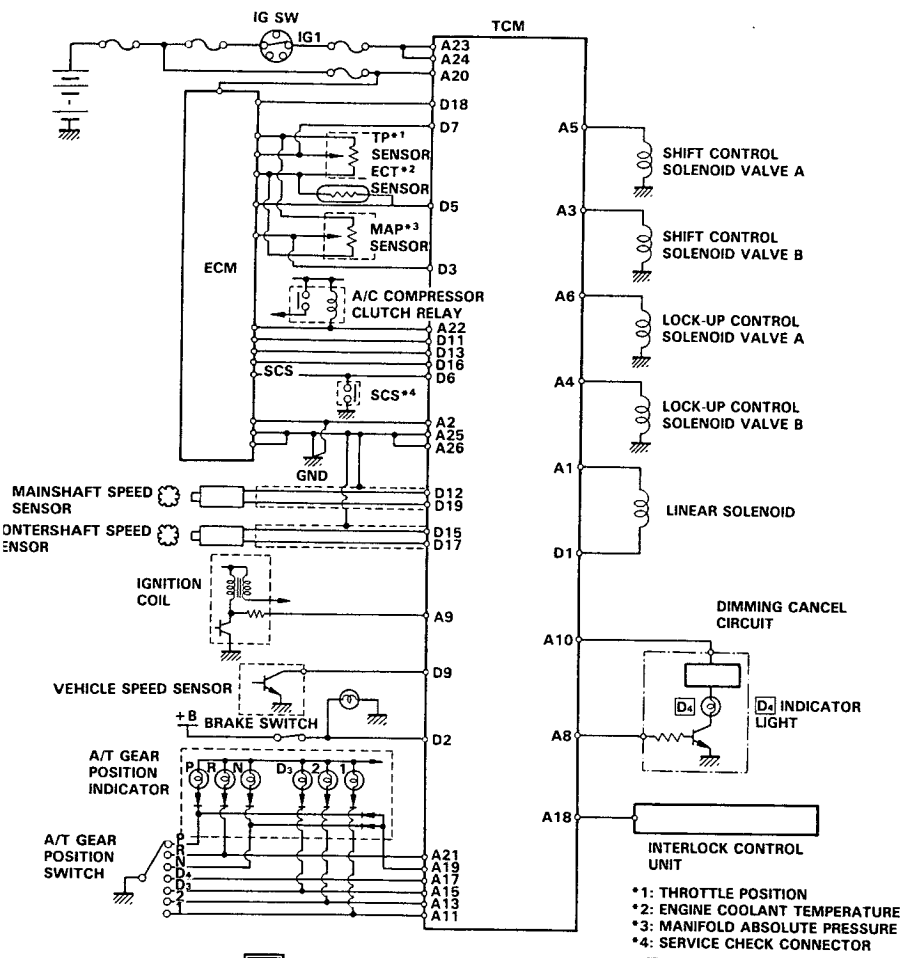

A1	A3	A5		A9	A11	A13	A15	A17	A19	A21	A23	A25
A2	A4	A6	A8	A10				A18	A20	A22	A24	A26

D1	D3	D5	D7	D9	D11	D13	D15	D17	D19	
D2		D6			D12		D16	D18		

TCM Terminal Location

Hydraulic Control

The valve bodies include the main valve body, servo body, oil pump body, regulator valve body, throttle valve body, and 2nd accumulator body.
The oil pump is driven by splines behind the torque converter which is attached to the engine. The oil flows through the regulator valve to maintain specified pressure through the main valve body to the manual valve, directing pressure to each of the clutches.

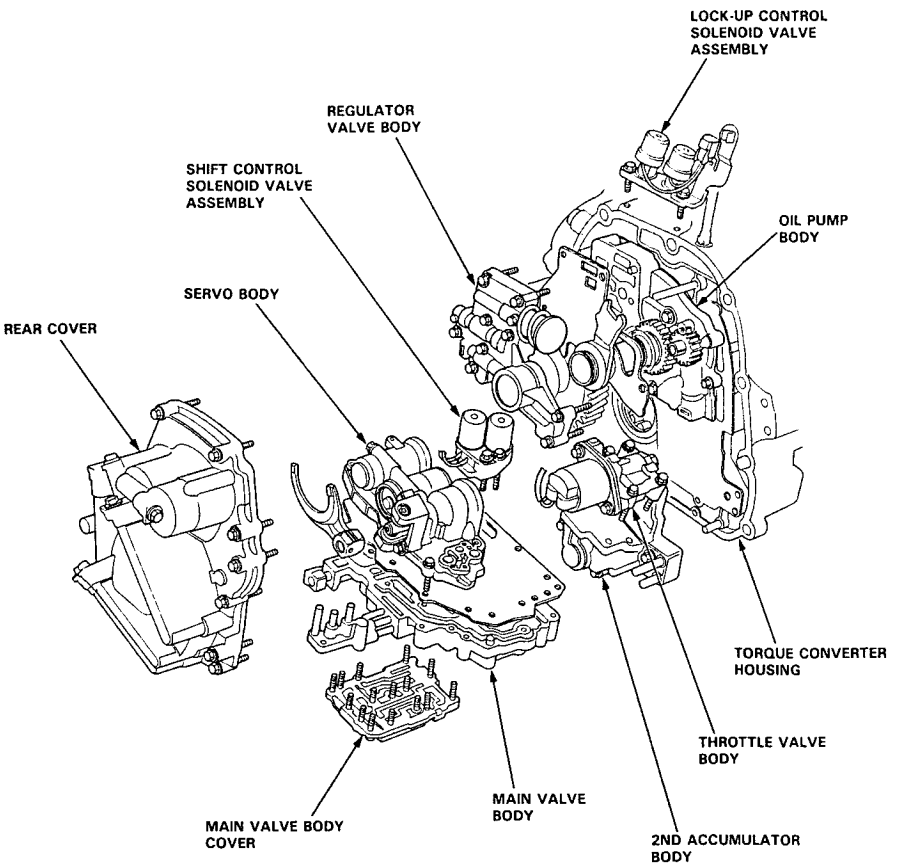

(cont'd)

Description

Hydraulic Control (cont'd)

Rear Cover
The 1st accumulator and 1st-hold accumulator are assembled in the rear cover.

Lower Valve Body Assembly
The lower valve body assembly is located on the bottom of the transmission.
The lower valve body assembly consists of the main valve body, servo body, shift control solenoid valves A/B and ATF strainer.

Servo Body
The servo body is assembled on the main valve body.
The servo valve which is integrated with the shift fork, 3rd accumulator, and 4th accumulator are all built into the servo body.
The shift fork installed on the end of the shift fork shaft operates the reverse selector.

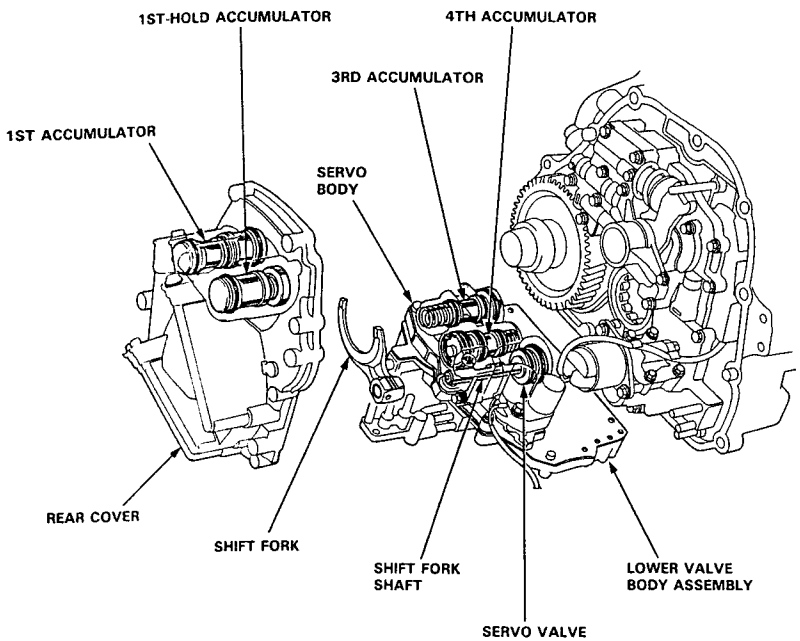

Main Valve Body
The manual valve, 1–2 shift valve, 2–3 shift valve, 3–4 shift valve, 2–3 orifice control valve, 3–4 orifice control valve, 4th exhaust valve, servo control valve, CPC valve, 3rd kick-down valve, and 4th kick-down valve are all built into the main valve body.
The primary function of this valve body is switching oil passages on and off and controlling the hydraulic pressure going to the hydraulic control system.

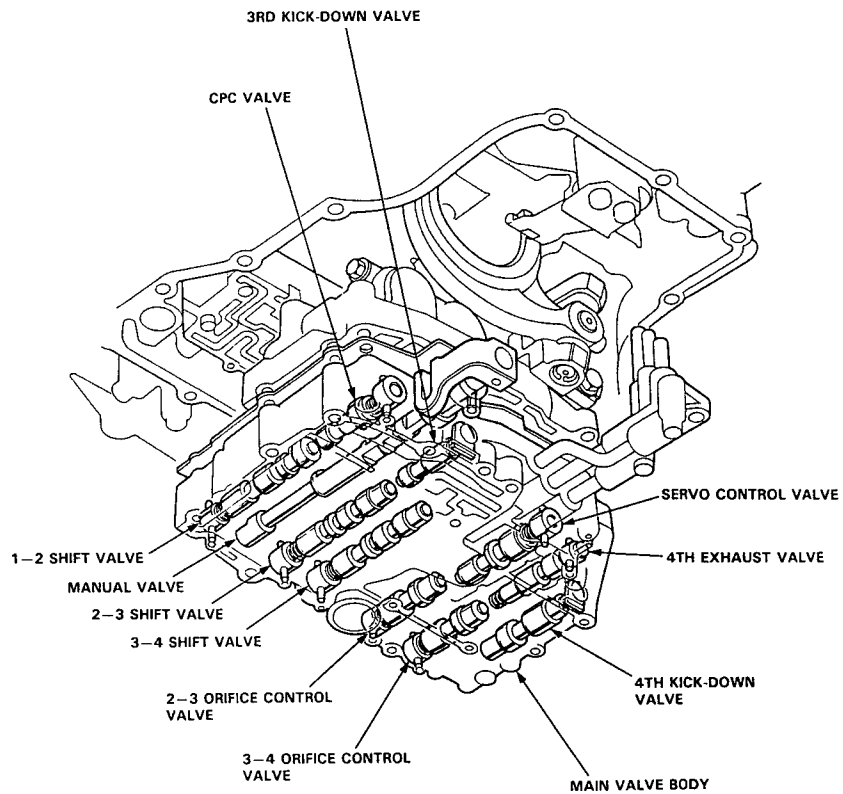

(cont'd)

Regulator Valve Body
The regulator valve body is located on the oil pump body. The regulator valve body consists of the lock-up shift valve, cooler relief valve and regulator valve.

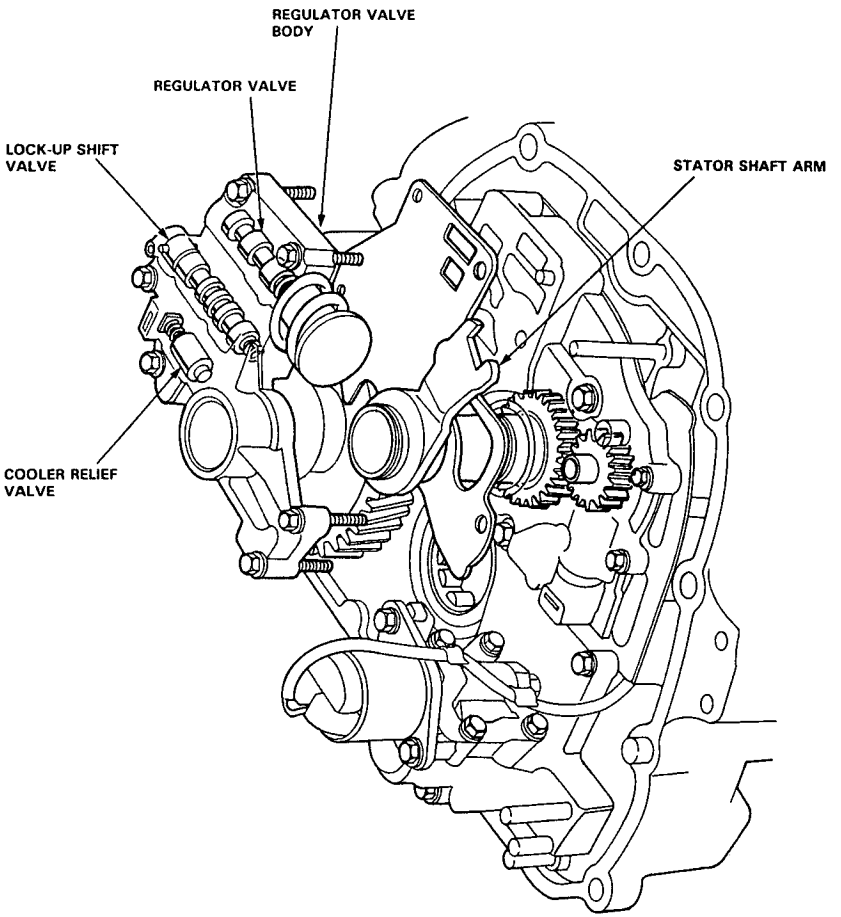

Regulator Valve
The regulator valve maintains a constant hydraulic pressure from the oil pump to the hydraulic control system, while also furnishing oil to the lubricating system and torque converter.
Oil flows through B and B'. The oil which enters through B flows through the valve orifice to A, pushing the regulator valve to the right. According to the level of hydraulic pressure through B, the position of the valve changes, and the amount of the oil through B' from D also changes. This operation is continued, maintaining line pressure.

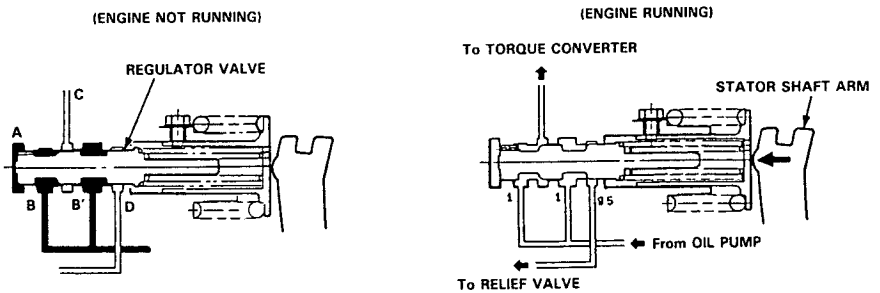

Stator Reaction Hydraulic Pressure Control
Hydraulic pressure increase according to torque is performed by the regulator valve using stator torque reaction. The stator shaft is splined to the stator and its arm end contacts the regulator spring cap. When the car is accelerating or climbing (Torque Converter Range), stator torque reaction acts on the stator shaft and the stator shaft arm pushes the regulator spring cap in this ➡ direction in proportion to the reaction. The stator reaction spring compresses and the regulator valve moves to increase the regulated control pressure or line pressure. Line pressure is maximum when the stator reaction is maximum.

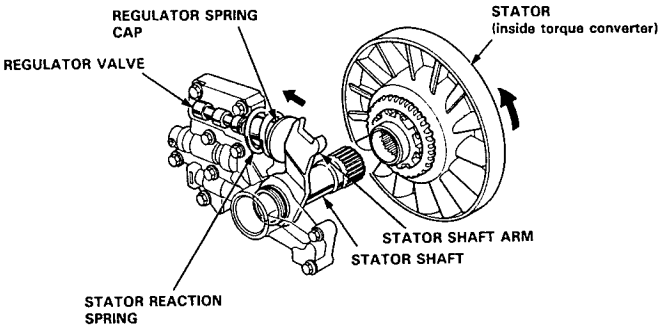

(cont'd)

Description

Hydraulic Control (cont'd)

Oil Pump Body
The oil pump body is located behind the torque converter housing. The oil pump body consists of the oil pump gears, lock-up control valve, lock-up timing valve, and relief valve. The torque converter check valve is located under the oil pump body.

Throttle Valve Body
The throttle valve body is located on the 2nd accumulator body. The throttle valve body assembly includes the throttle valve and linear solenoid. The linear solenoid which is controlled by the TCM operates the throttle valve.

2nd Accumulator Body
The 2nd accumulator body consists of the 2nd accumulator.

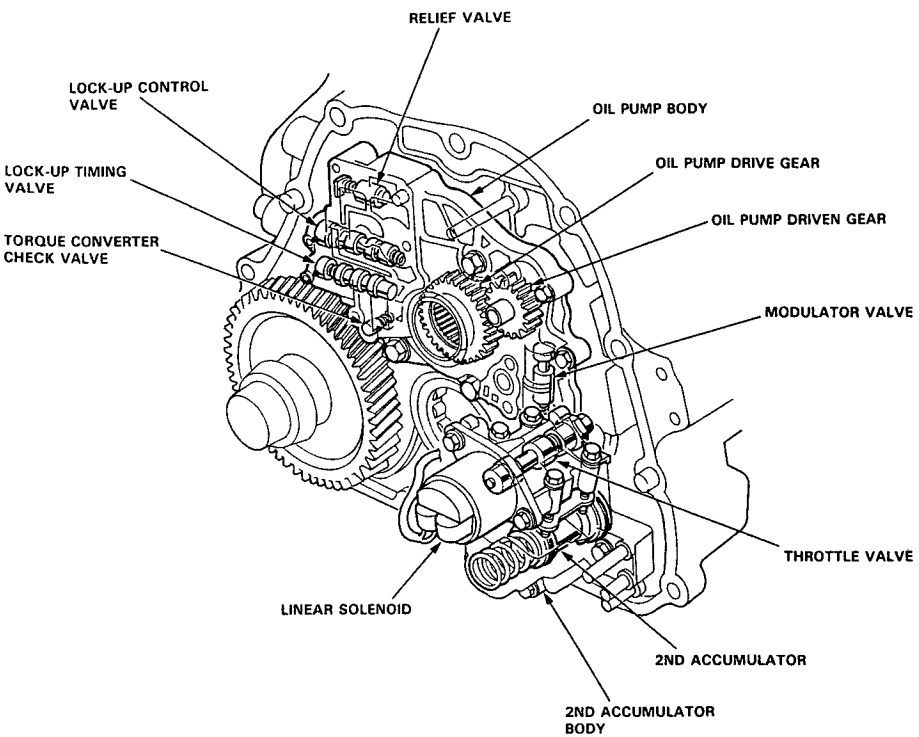

Hydraulic Flow

General chart of Hydraulic Pressure

Oil Pump → Regulator Valve → { Line Pressure / Torque converter Pressure / Lubrication Pressure }

Distribution of Hydraulic pressure

- Manual Valve → To Select Line Pressure
- Throttle Valve → Throttle B Pressure
- 1-2 Shift Valve / 2-3 Shift Vavle / 3-4 Shift Valve → Clutch Pressure

NO.	DESCRIPTION OF PRESSURE	NO.	DESCRIPTION OF PRESSURE	NO.	DESCRIPTION OF PRESSURE
1	LINE	15	1ST-HOLD CLUTCH	55	THROTTLE B
2	LINE	16	1ST-HOLD CLUTCH	56	THROTTLE B
3	LINE	18	LINE	90	TORQUE CONVERTER
3'	LINE	20	2ND CLUTCH	91	TORQUE CONVERTER
3''	LINE	21	2ND CLUTCH	92	TORQUE CONVERTER
4	LINE	22	2ND CLUTCH	93	OIL COOLER
4'	LINE	25	LINE	94	TORQUE CONVERTER
4''	LINE	30	3RD CLUTCH	95	LUBRICATION
5	LINE	31	3RD CLUTCH	96	TORQUE CONVERTER
6	MODULATOR	32	3RD CLUTCH	99	SUCTION
6'	MODULATOR (DUTY CONTROL)	40	4TH CLUTCH	X	BLEED
9	LINE	41	4TH CLUTCH		
10	1ST CLUTCH	42	4TH CLUTCH		

(cont'd)

Description

Hydraulic Flow

N Position

As the engine turns, the oil pump also starts to operate. Automatic transmission fluid (ATF) is drawn from (99) and discharged into (1). Then, hydraulic pressure is controlled by the regulator valve and becomes line pressure (1). The torque converter inlet pressure (92) enters (94) of torque converter through the orifice and discharges into (90).
The torque converter check valve prevents the torque converter pressure from rising.
Under this condition, hydraulic pressure is not applied to the clutches.

NOTE:
- When used, "left" or "right" indicates direction on the flowchart.
- SOL-Ⓐ: Shift Control Solenoid Valve A
- SOL-Ⓑ: Shift Control Solenoid Valve B
- SOL-Ⓒ: Lock-up Control Solenoid Valve A
- SOL-Ⓓ: Lock-up Control Solenoid Valve B

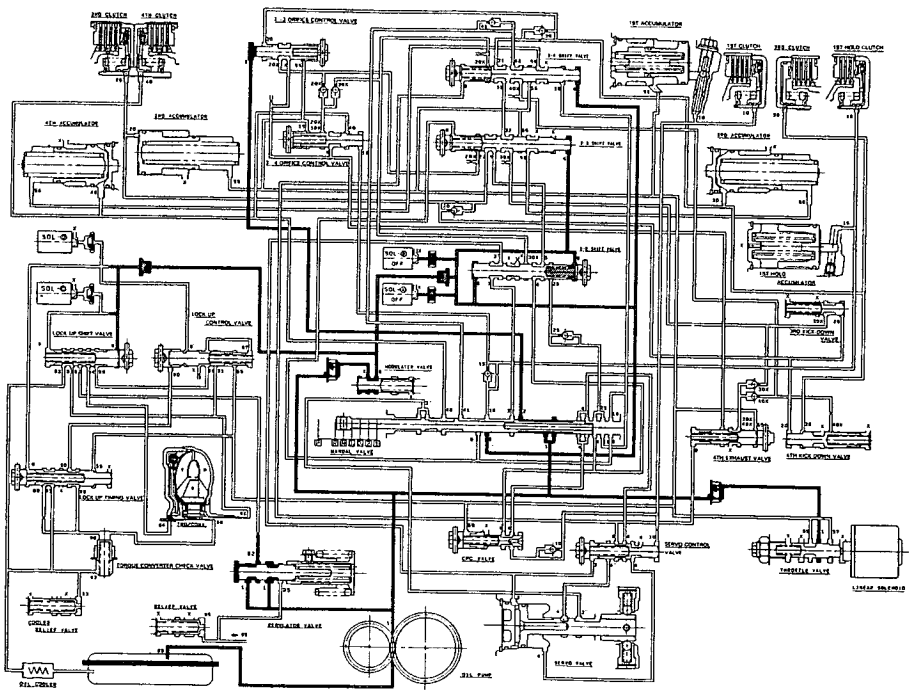

1 Position

The line pressure (1) becomes the line pressure (4), (18), (25) as it passes through the manual valve. Also, the line pressure (1) goes to the modulator valve through the filter and becomes the modulator pressure (6). The modulator pressure (6) is supplied to the 1-2 shift valve and 2-3 shift valve. The 1-2 and 2-3 shift valves are moved to the left side because the shift control solenoid valve A is turned ON and B is turned OFF by the TCM. The line pressure (18) is supplied to the 3-4 shift valve, and it is moved to the left side. The line pressure (4) becomes the 1st clutch pressure (10) via the orifice, then the 1st clutch is engaged. The 1st clutch pressure (10) is also supplied to the servo control valve.
The line pressure (4) becomes the 1st-hold clutch pressure (16) via the 1-2 shift valve, 2-3 shift valve, 3-4 shift valve, manual valve and orifice, then the 1st-hold clutch is engaged.

NOTE:
- When used, "left" or "right" indicates direction on the flowchart.
- SOL-Ⓐ: Shift Control Solenoid Valve A
- SOL-Ⓑ: Shift Control Solenoid Valve B
- SOL-Ⓒ: Lock-up Control Solenoid Valve A
- SOL-Ⓓ: Lock-up Control Solenoid Valve B

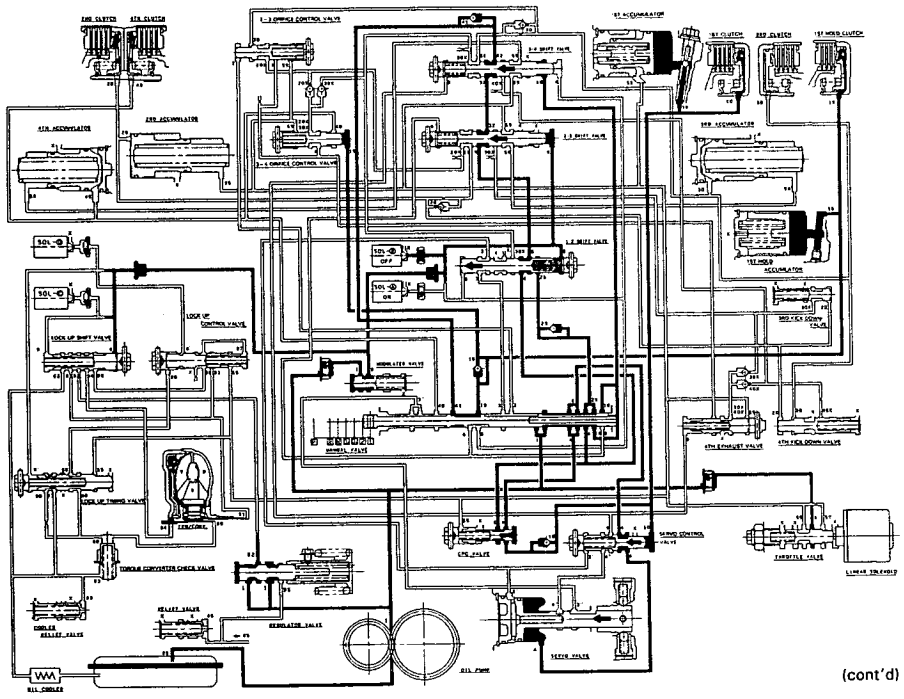

(cont'd)

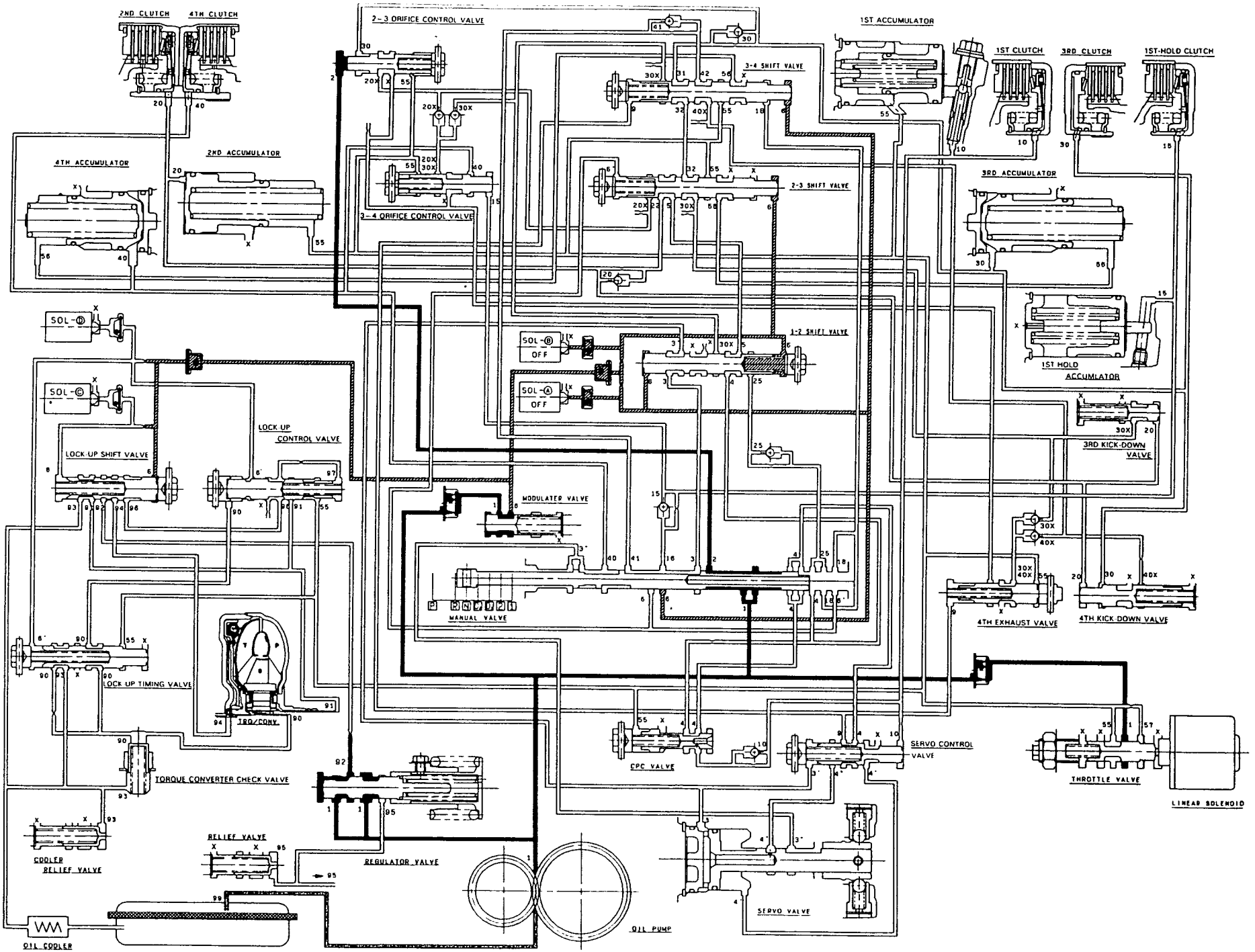
2ND CLUTCH
4TH CLUTCH
2-3 ORIFICE CONTROL VALVE
1ST ACCUMULATOR
1ST CLUTCH
3RD CLUTCH
1ST-HOLD CLUTCH
3-4 SHIFT VALVE
4TH ACCUMULATOR
2ND ACCUMULATOR
3-4 ORIFICE CONTROL VALVE
2-3 SHIFT VALVE
3RD ACCUMULATOR
SOL-B
SOL-B OFF
SOL-A OFF
SOL-C
1-2 SHIFT VALVE
1ST HOLD ACCUMULATOR
LOCK UP CONTROL VALVE
LOCK UP SHIFT VALVE
3RD KICK-DOWN VALVE
MODULATER VALVE
MANUAL VALVE
4TH EXHAUST VALVE
4TH KICK DOWN VALVE
LOCK UP TIMING VALVE
TRQ/CONV.
TORQUE CONVERTER CHECK VALVE
CPC VALVE
SERVO CONTROL VALVE
THROTTLE VALVE
LINEAR SOLENOID
COOLER RELIEF VALVE
RELIEF VALVE
REGULATOR VALVE
OIL PUMP
SERVO VALVE
OIL COOLER

Description

Hydraulic Flow (cont'd)

2 Position

The line pressure (1) becomes the line pressure (4), (25) as it passes through the manual valve.
Also, the line pressure (1) goes to the modulator valve and becomes the modulator pressure (6). The modulator pressure (6) is supplied to each shift valve. The 1-2 shift valve is held in the left side; the 2-3 shift valve is held in the right side; the 3-4 shift valve is moved to left side because the shift control solenoid valves A and B are turned on OFF by the TCM.
The line pressure (4) becomes the line pressure (5) via the 1-2 shift valve, then the line pressure (5) becomes the 2nd clutch pressure (22) via the 2-3 shift valve. The 2nd clutch pressure (22) becomes the 2nd clutch pressure (20) via the orifice, and goes to the 2nd clutch, then the 2nd clutch is engaged.
The line pressure (1) also flows to the throttle valve.
The line pressure (4) also becomes the 1st clutch pressure (10) and flows to the 1st clutch and the servo control valve. However, no power is transmitted from the 1st clutch by means of the one-way clutch.

NOTE:
- When used, "left" or "right" indicates direction on the flowchart.
- SOL-Ⓐ: Shift Control Solenoid Valve A
- SOL-Ⓑ: Shift Control Solenoid Valve B
- SOL-Ⓒ: Lock-up Control Solenoid Valve A
- SOL-Ⓓ: Lock-up Control Solenoid Valve B

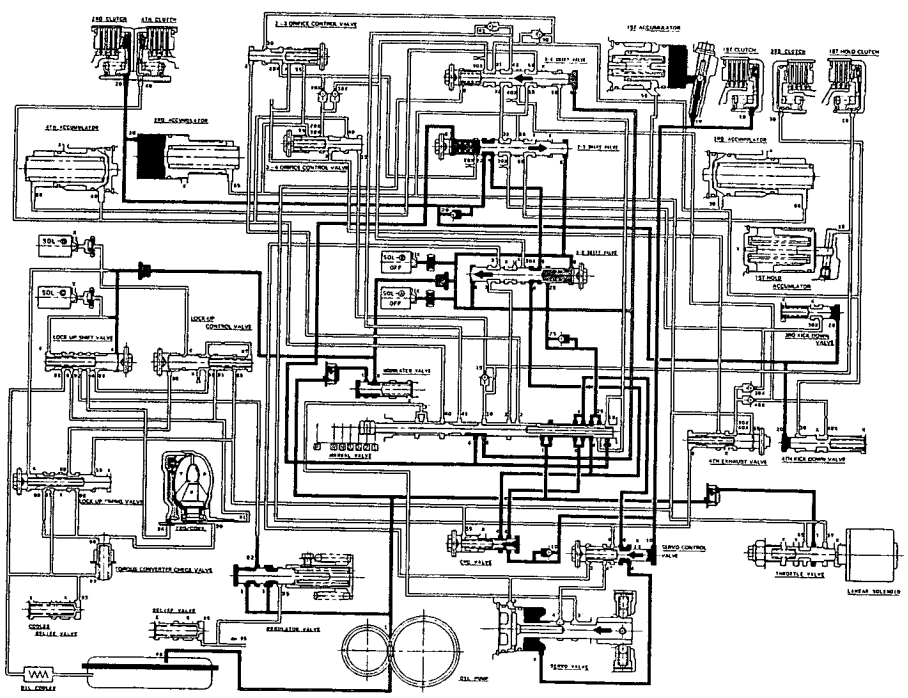

D4 or D3 Position

1. 1st speed
   The flow of fluid through the torque converter is same as in N position. The line pressure (1) becomes the line pressure (4) and it becomes the 1st clutch pressure (10). The 1st clutch pressure (10) is applied to the 1st clutch and the 1st accumulator, consequently the vehicle will moved as the engine power is transmitted. And the line pressure (4) also goes to the 1-2 shift valve via the CPC valve. But the line pressure (4) is intercepted by the 1-2 shift valve in 1st speed.
   The line pressure (1) becomes the modulator pressure (6) by the modulator valve and travels to the 1-2 and 3-4 shift valves. The 1-2 shift valve is moved to the right side because the shift control solenoid valve A is turned OFF and B is turned ON by the TCM.
   The line pressure (1) also flows to the throttle valve.

NOTE:
- When used, "left" or "right" indicates direction on the flowchart.
- SOL-Ⓐ: Shift Control Solenoid Valve A
- SOL-Ⓑ: Shift Control Solenoid Valve B
- SOL-Ⓒ: Lock-up Control Solenoid Valve A
- SOL-Ⓓ: Lock-up Control Solenoid Valve B

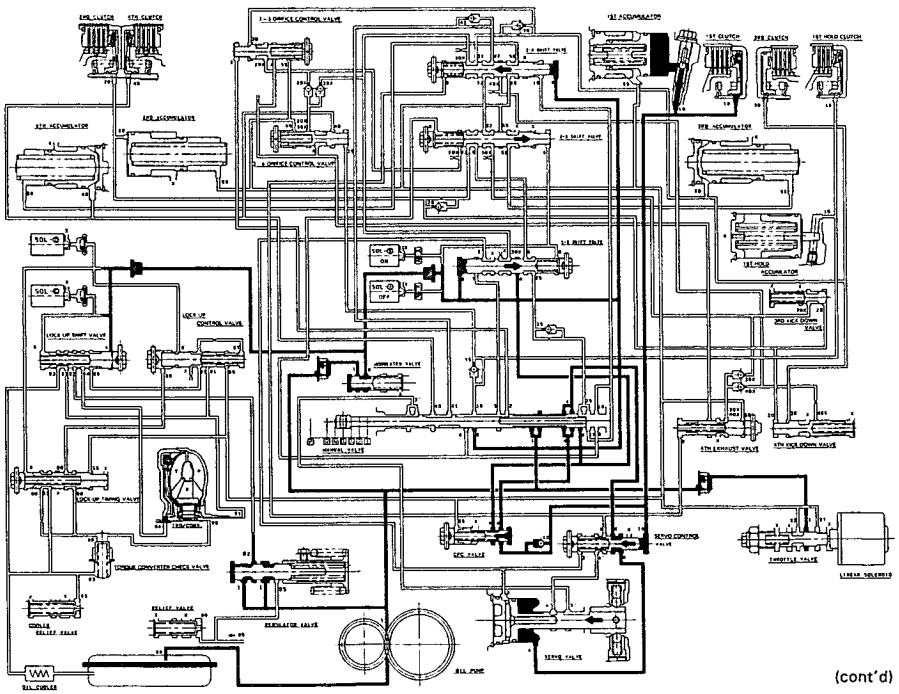

(cont'd)

Description

Hydraulic Flow (cont'd)

2. 2nd speed

As the speed of the car reaches the prescribed value, the shift control solenoid valve A is turned ON by the TCM, and the shift control solenoid valve B remains ON. As a result, the 1-2 shift valve is moved to the left side and uncovers the port leading the line pressure (4) to the 2-3 shift valve. The line pressure (4) up to the 1-2 shift valve is the same as in the 1st speed. Then the line pressure (4) becomes the line pressure (5). The line pressure (5) goes to the 2-3 shift valve, and becomes the 2nd clutch pressure (22). The 2nd clutch pressure (22) becomes the 2nd clutch pressure (20) via the orifice, and goes to the 2nd clutch, then the 2nd clutch is engaged.

Hydraulic pressure also flows to the 1st clutch. However, no power is transmitted by means of the one-way clutch.

NOTE:
- When used, "left" or "right" indicates direction on the flowchart.
- SOL-Ⓐ: Shift Control Solenoid Valve A
- SOL-Ⓑ: Shift Control Solenoid Valve B
- SOL-Ⓒ: Lock-up Control Solenoid Valve A
- SOL-Ⓓ: Lock-up Control Solenoid Valve B

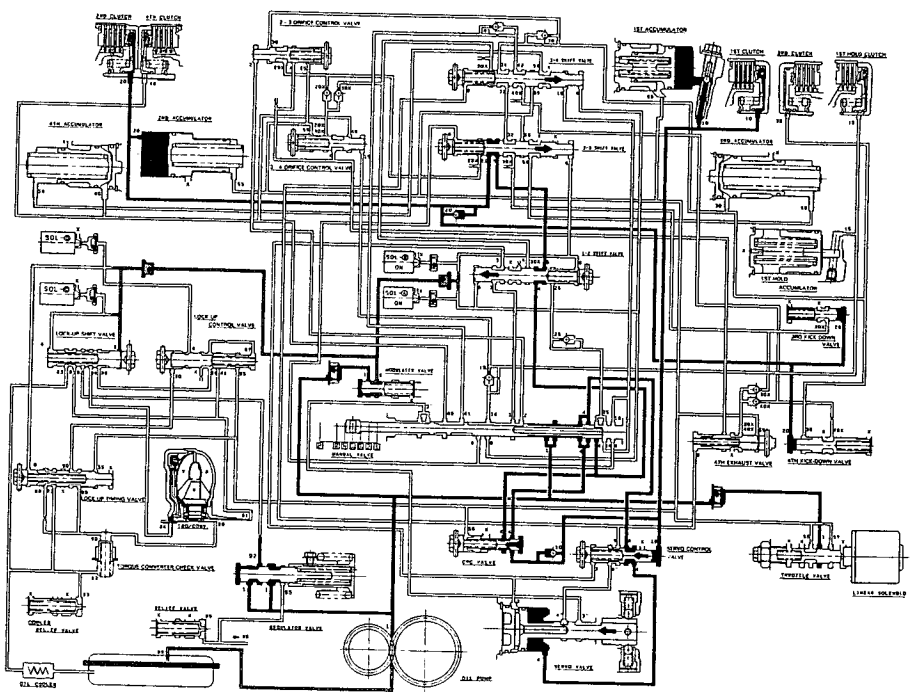

3. 3rd speed

As the speed of the car reaches the prescribed value, the shift control solenoid valve B is turned OFF by the TCM, and the shift control solenoid valve A remains ON. As a result, the 2-3 shift valve is moved to the left side and uncovers the port leading the line pressure (5) from the 1-2 shift valve to the 3-4 shift valve. The line pressure (4) up to the 1-2 shift vlave is the same as in the 1st and 2nd speed. Then the line pressure (5) becomes the 3rd clutch pressure (30) by way of 2-3 shift valve, 3-4 shift valve and orifice, and goes to the 3rd clutch, then the 3rd clutch is engaged.

Hydraulic pressure also flows to the 1st clutch. However, no power is transmitted by means of the one-way clutch.

NOTE:
- When used, "left" or "right" indicates direction on the flowchart.
- SOL-Ⓐ: Shift Control Solenoid Valve A
- SOL-Ⓑ: Shift Control Solenoid Valve B
- SOL-Ⓒ: Lock-up Control Solenoid Valve A
- SOL-Ⓓ: Lock-up Control Solenoid Valve B

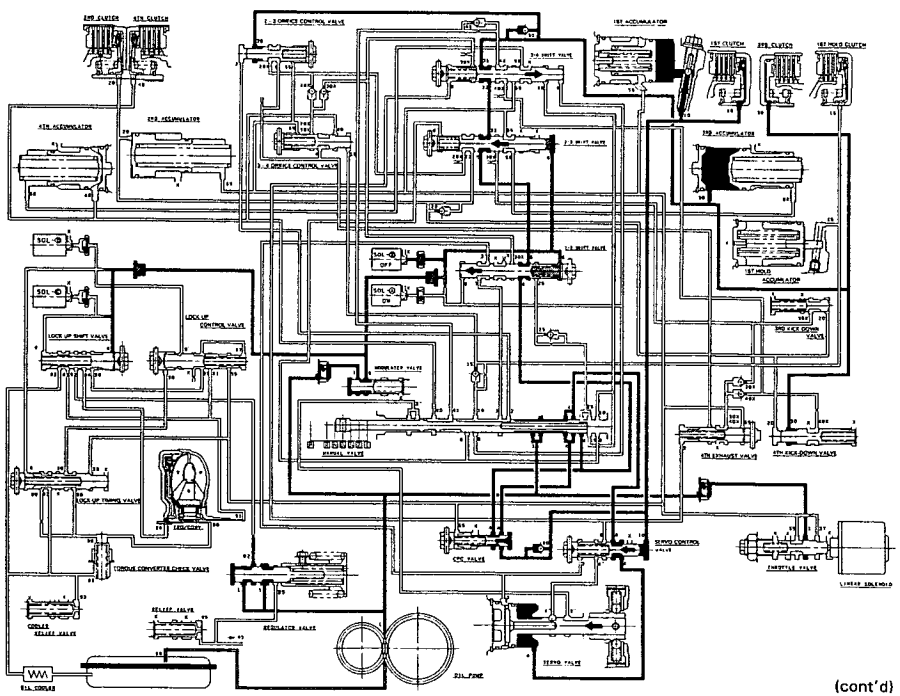

(cont'd)

Description

– Hydraulic Flow (cont'd)

4. 4th speed

As the speed of the car reaches the prescribed value, the shift control solenoid valve A is turned OFF by the TCM. The shift control solenoid valve B remains OFF as in the 3rd speed. Since the 1-2 and 2-3 shift valves are kept on the left side. The flow of fluid up to the 1-2, 2-3 and 3-4 shift valves is same as in the 3rd speed.

The 3-4 shift valve is moved to the left side and uncovers the port leading to the 4th clutch. The 4th clutch pressure (42) as it passes through the 3-4 shift valve become the 4th clutch pressure (40) via the manual valve, and goes to the 4th clutch. Then the 4th clutch is engaged.

Hydraulic pressure also flows to the 1st clutch. However, no power is transmitted by means of the one-way clutch.

NOTE:
- When used, "left" or "right" indicates direction on the flowchart.
- SOL-Ⓐ: Shift Control Solenoid Valve A
- SOL-Ⓑ: Shift Control Solenoid Valve B
- SOL-Ⓒ: Lock-up Control Solenoid Valve A
- SOL-Ⓓ: Lock-up Control Solenoid Valve B

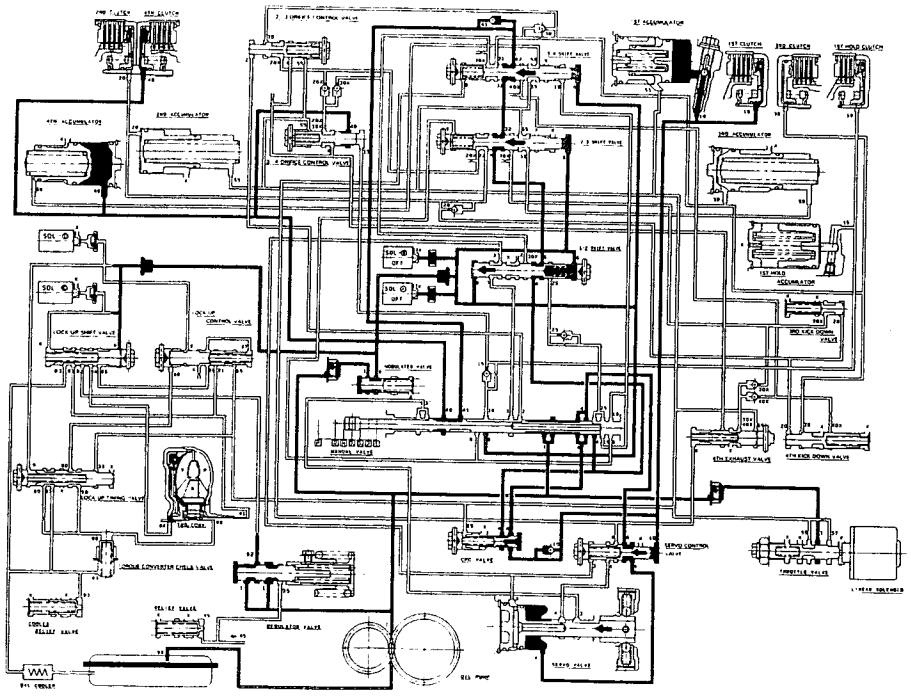

R Position

The flow of fluid through the torque converter circuit is the same as in the N position. The line pressure (1) becomes the line pressure (3) as it passes the manual valve . It then flows through the 1-2 shift valve to the servo valve and servo control valve, causing the shift fork shaft to be moved to the reverse position.
The 1-2, 2-3 and 3-4 shift valves are moved to the left side because the shift control solenoid valve A and B are turned OFF by the TCM as in the D4 position in the 4th speed. The line pressure (3') passed through the servo valve becomes the 4th clutch pressure (40) via the manual valve, then it goes to the 4th clutch; the power is transmitted through the 4th clutch.

Reverse Inhibitor Control

When the R position is selected while the vehicle is moving forward at more than a certain speed, the TCM outputs 1st speed signal (shift control solenoid valve A: OFF, B: ON), and the 1-2 shift valve is moved to the right side. The line pressure (3) is intercepted by the 1-2 shift valve; consequently, the power is not transmitted, since the 4th clutch and servo valve are not operated.

NOTE:
- When used, "left" or "right" indicates direction on the flowchart.
- SOL-Ⓐ: Shift Control Solenoid Valve A
- SOL-Ⓑ: Shift Control Solenoid Valve B
- SOL-Ⓒ: Lock-up Control Solenoid Valve A
- SOL-Ⓓ: Lock-up Control Solenoid Valve B

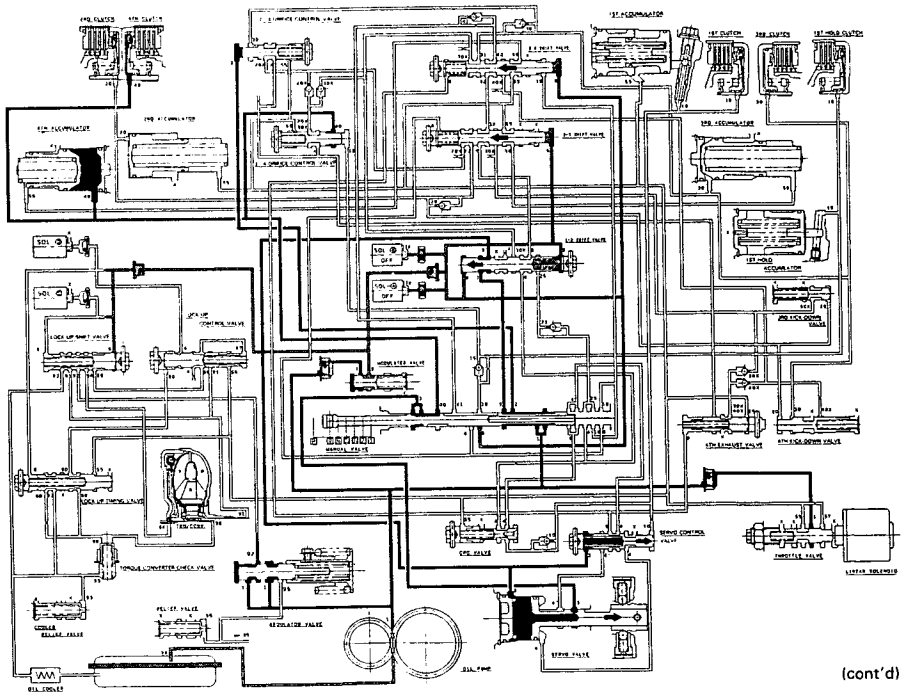

(cont'd)

Description

Hydraulic Flow (cont'd)

P Position

The flow of fluid through the torque converter circuit is the same as in the N position. The line pressure (1) becomes the line pressure (3) as it passes the manual valve . The line pressure (3) flows through the 1-2 shift valve to the servo valve and the servo control valve, causing the shift fork shaft to be moved to the reverse position as in the R position. However, the hydraulic pressure is not supplied to the clutches. The power is not transmitted.

NOTE:
- When used, "left" or "right" direction on the flowchart
- SOL-Ⓐ: Shift Control Solenoid Valve A
- SOL-Ⓑ: Shift Control Solenoid Valve B
- SOL-Ⓒ: Lock-up Control Solenoid Valve A
- SOL-Ⓓ: Lock-up Control Solenoid Valve B

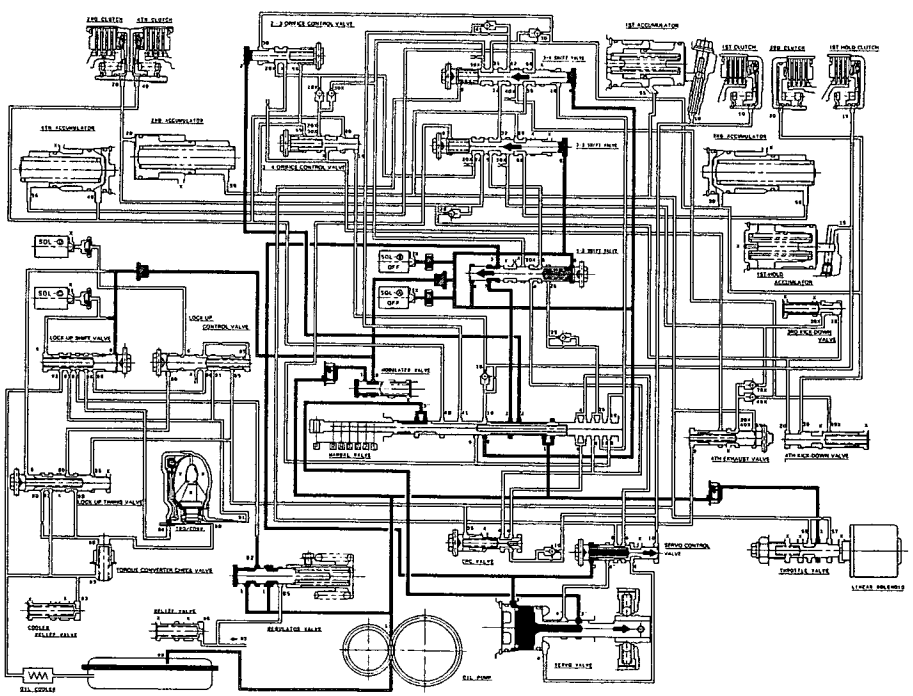

Lock-up System

In D4 position in 2nd, 3rd and 4th, and D3 position in 3rd, pressurized fluid is drained from the back of the torque converter through an oil passage, causing the lock-up piston to be held against the torque converter cover. As this takes place, the mainshaft rotates at the same speed as the engine crankshaft. Together with hydraulic control, the TCM optimizes the timing of the lock-up system. Under certain conditions, the lock-up operation is applied during deceleration, in 3rd and 4th speed.

The lock-up shift valve controls the range of lock-up according to lock-up control solenoid valves A and B, and the throttle valve. When lock-up control solenoid valves A and B activate, modulator pressure changes. Lock-up control solenoid valves A and B are mounted on the torque converter housing and are controlled by the TCM.

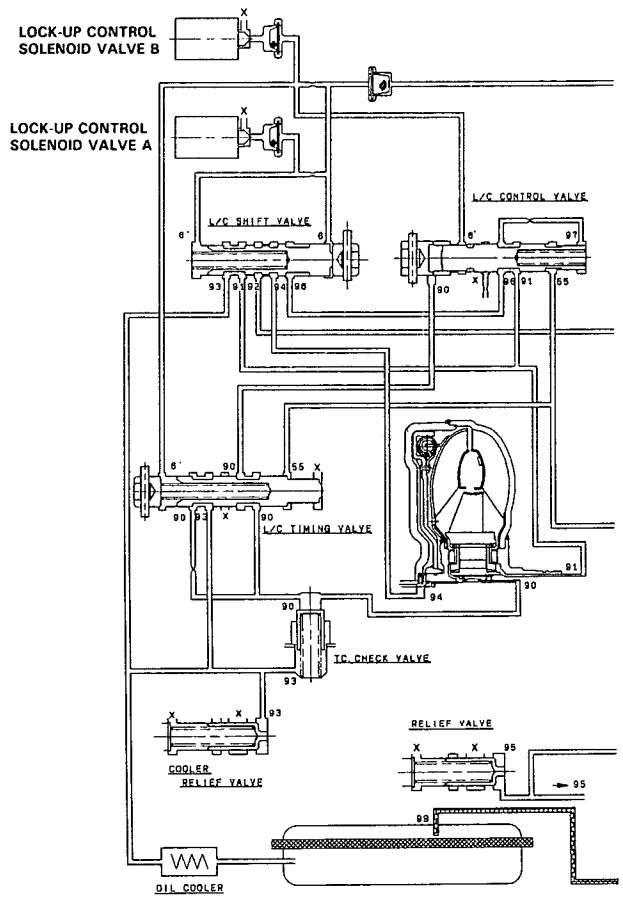

(cont'd)

Description

Lock-up System (cont'd)

No Lock-up

Pressured fluid regulated by the modulator works on both ends of the lock-up shift valve and on the left side of the lock-up control valve. Under this condition, the pressure on both ends of the lock-up shift valve are equal, and the lock-up shift valve is moved to the right side by the tension of the valve spring alone. The fluid from the oil pump will flow through the left side of the lock-up clutch to the torque converter; i.e., the lock-up clutch is in OFF condition.

NOTE: When used, "left" or "right" indicates direction on the flowchart.

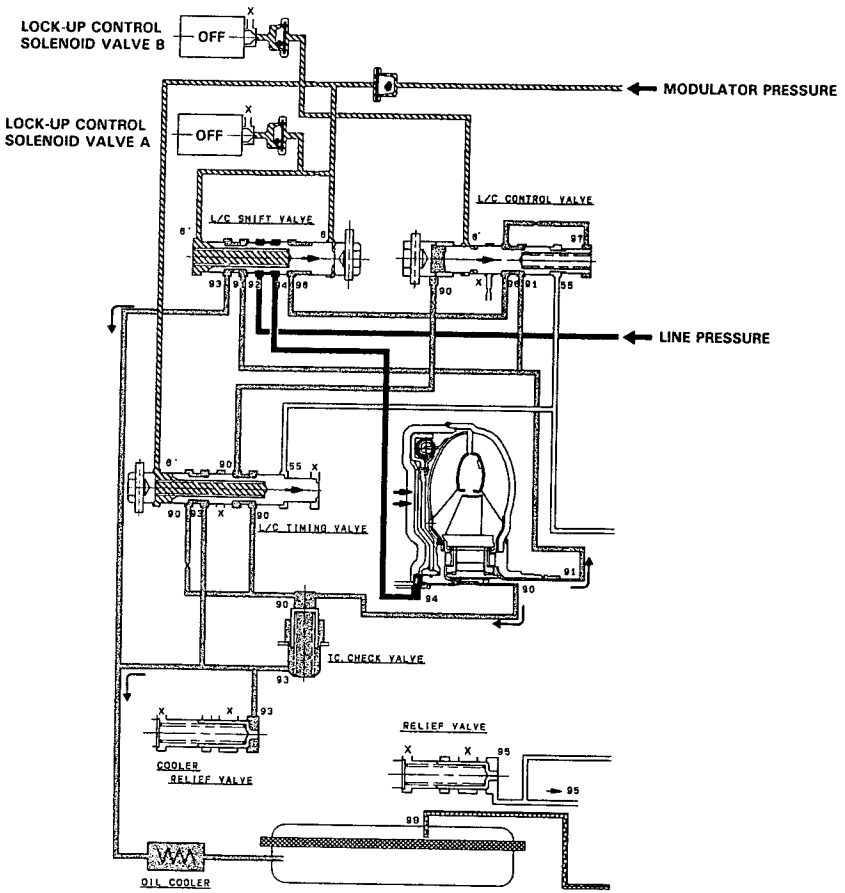

Partial Lock-up

Lock-up Control Solenoid Valve A: ON Lock-up Control Solenoid Valve B: OFF

The TCM switches the solenoid valve A to ON to release the modulator pressure in the left cavity of the lock-up shift valve. The modulator pressure in the right cavity of the lock-up shift valve overcomes the spring force, thus the lock-up shift valve is moved to the left side.

The torque converter pressure is separated into two passages:

Torque Converter Inner Pressure: enters into right side—to engage lock-up clutch.

Torque Converter Back Pressure: enters into left side—to disengage lock-up clutch.

The back pressure (F2) is regulated by the lock-up control valve, whereas the position of the lock-up timing valve is determined by the throttle B pressure, tension of the valve spring and pressure regulated by the modulator. Also the position of the lock-up control valve is determined by the throttle B pressure, torque converter back pressure and torque converter pressure regulated by the check valve. In low speed range, the throttle B pressure working on the right side of the lock-up control valve is low, causing the valve to be moved to the right side. With the lock-up control solenoid valve B kept OFF, the modulator pressure is maintained in the left side of the lock-up control valve; in other words, the lock-up control valve is moved slightly to the left side. This slight movement of the lock-up control valve causes the back pressure (F2) to be lowered slightly, resulting in partial lock-up.

NOTE: When used, "left" or "right" indicates direction on the flowchart.

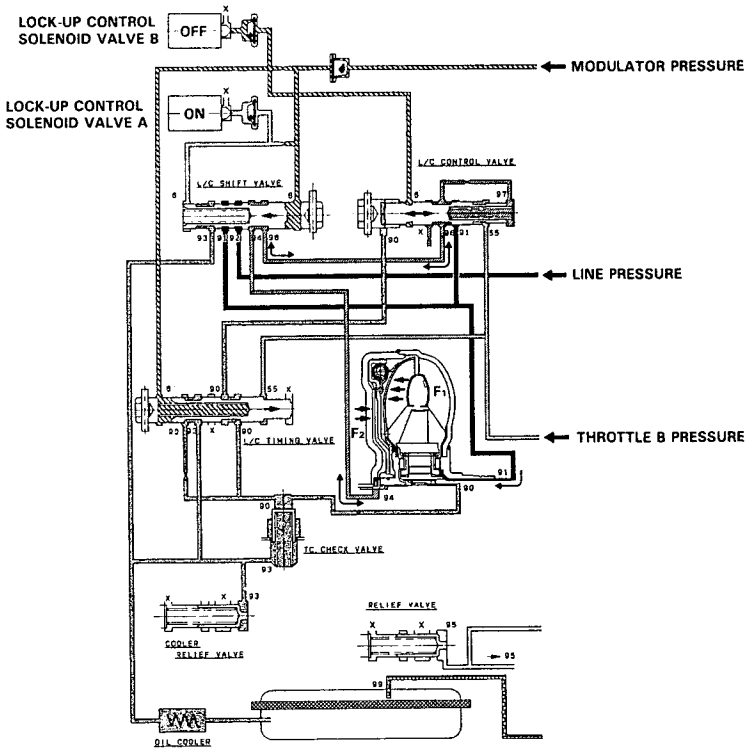

(cont'd)

Description

Lock-up System (cont'd)

Half Lock-up

Lock-up Control Solenoid Valve A: ON Lock-up Control Solenoid Valve B: ON

The modulator pressure is released by the solenoid valve B, causing the modulator pressure in the left cavity of the lock-up control valve to lower.

Also, the modulator pressure in the left cavity of the lock-up timing valve is low. However, the throttle B pressure is still low at this time, consequently the lock-up timing valve is kept on the right side by the spring force.

With the lock-up control solenoid valve B turned ON, the lock-up control valve is moved somewhat to the right side, causing the back pressure (F2) to lower. This allows a greater amount of the fluid (F1) to work on the lock-up clutch so as to engage the clutch. The back pressure (F2) which still exists prevents the clutch from engaging fully.

NOTE: When used, "left" or "right" indicates direction on the flowchart.

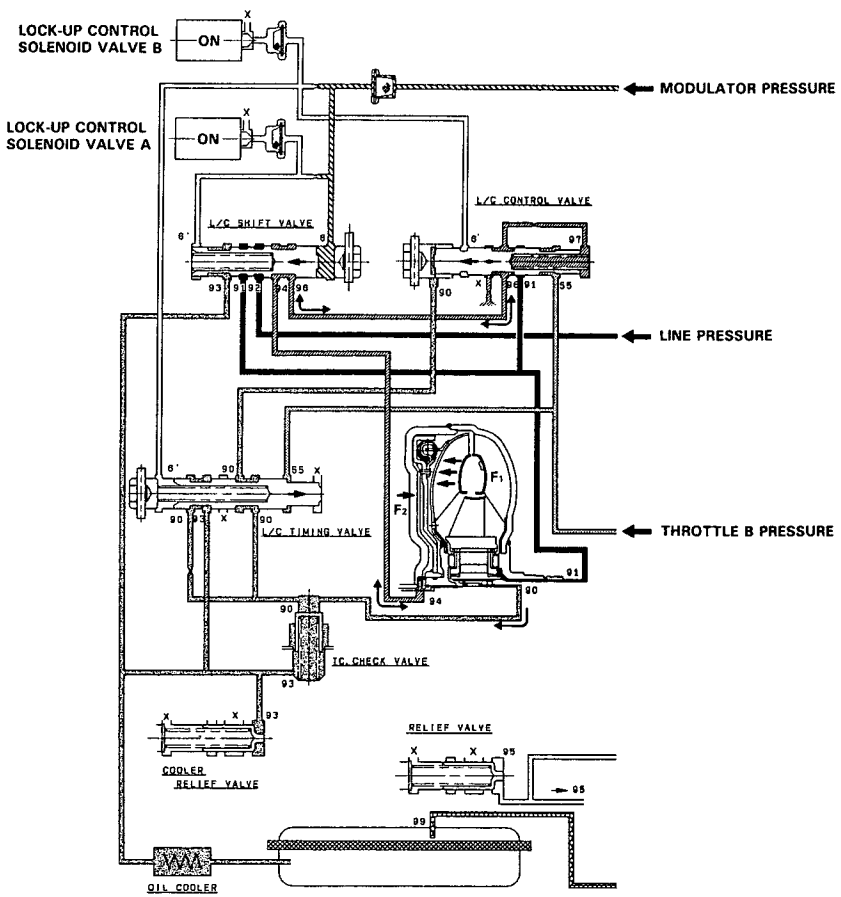

Full Lock-up

Lock-up Control Solenoid Valve A: ON Lock-up Control Solenoid Valve B: ON

When the vehicle speed further increases, the throttle B pressure is increased in accordance with the throttle opening. The lock-up timing valve overcomes the spring force and moves to the left side. Also this valve closes the oil port leading to the torque converter check valve.

Under this condition, the throttle B pressure working on the right side of the lock-up control valve becomes greater than that on the left end (modulator pressure in the left end has already been released by the solenoid valve B); i. e., the lock-up control valve is moved to the left side. As this happens, the torque converter back pressure is released fully, causing the lock-up clutch to be engaged fully.

NOTE: When used, "left" or "right" indicates direction on the flowchart.

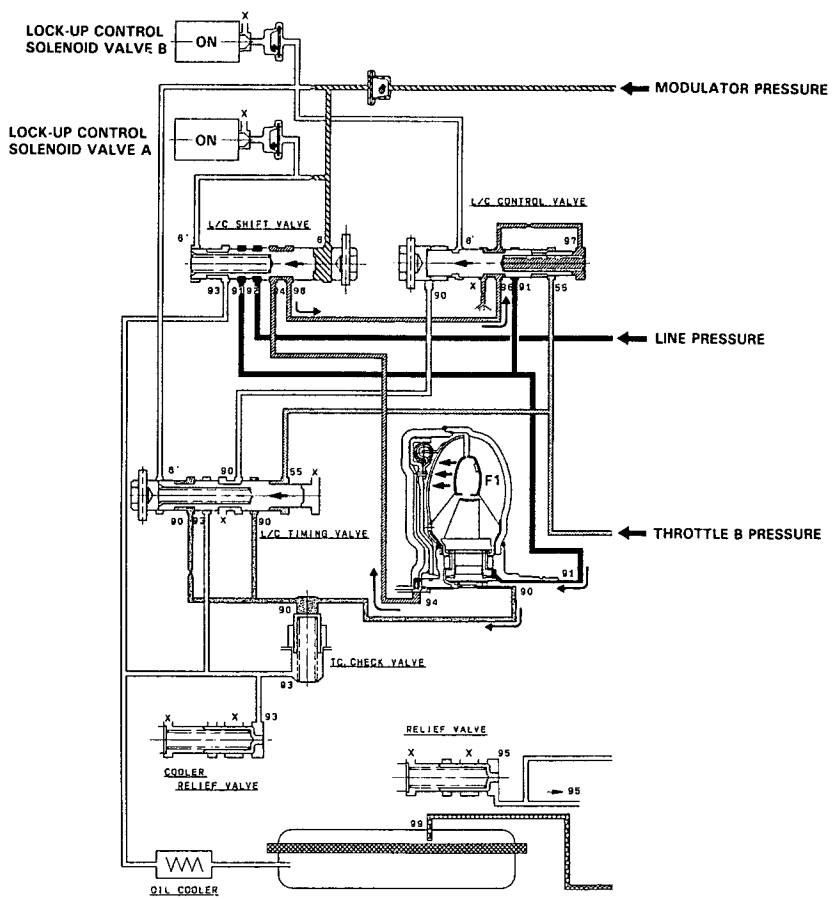

(cont'd)

Description

Lock-up System (cont'd)

Deceleration Lock-up

Lock-up Control Solenoid Valve A: ON Lock-up Control Solenoid Valve B: Duty Operation (ON ↔ OFF)

The TCM switches the solenoid valve B to ON and OFF alternately at high speeds under certain conditions. The slight lock-up and half lock-up regions are maintained so as to lock the torque converter properly.

NOTE: When used, "left" or "right" indicates direction on the flowchart.

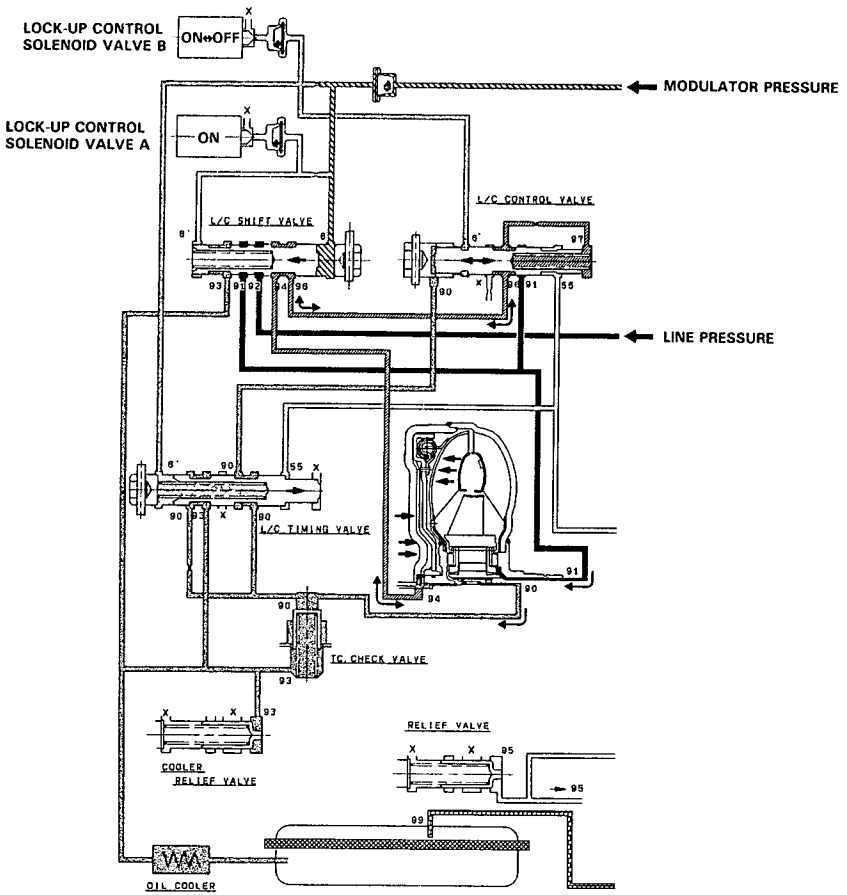

Parking Brake Mechanism

The parking brake mechanism locks the transmission by engaging the parking brake pawl into the parking gear which is splined to the countershaft.

Setting the select lever to [P] position causes the parking brake pawl roller (installed at the end of the parking brake shift arm) to press the parking brake pawl onto the parking gear. Even if the end of the parking brake pawl rides on top of the parking gear teeth, slight movement of the countershaft will cause the parking brake pawl and the parking gear to mesh with each other completely, because the parking brake shift arm receives tension from the parking brake shift arm spring. The parking brake pawl receives the tension (which acts to separate the parking brake pawl from the parking gear) from the parking pawl spring.

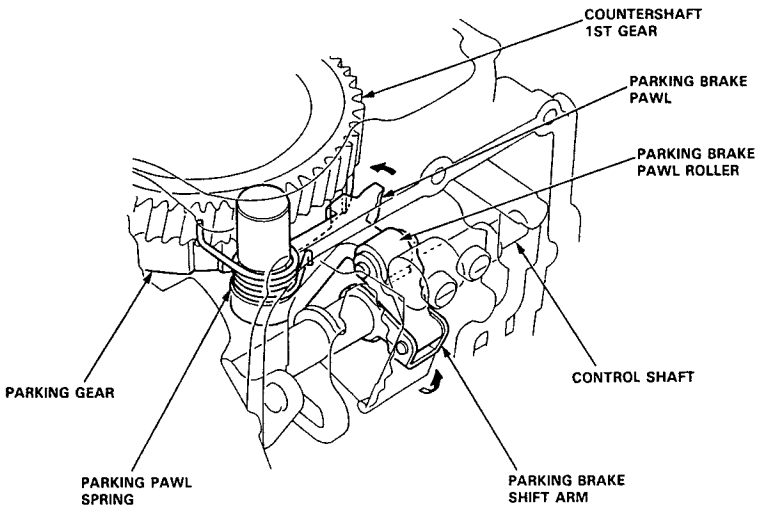

Circuit Diagram

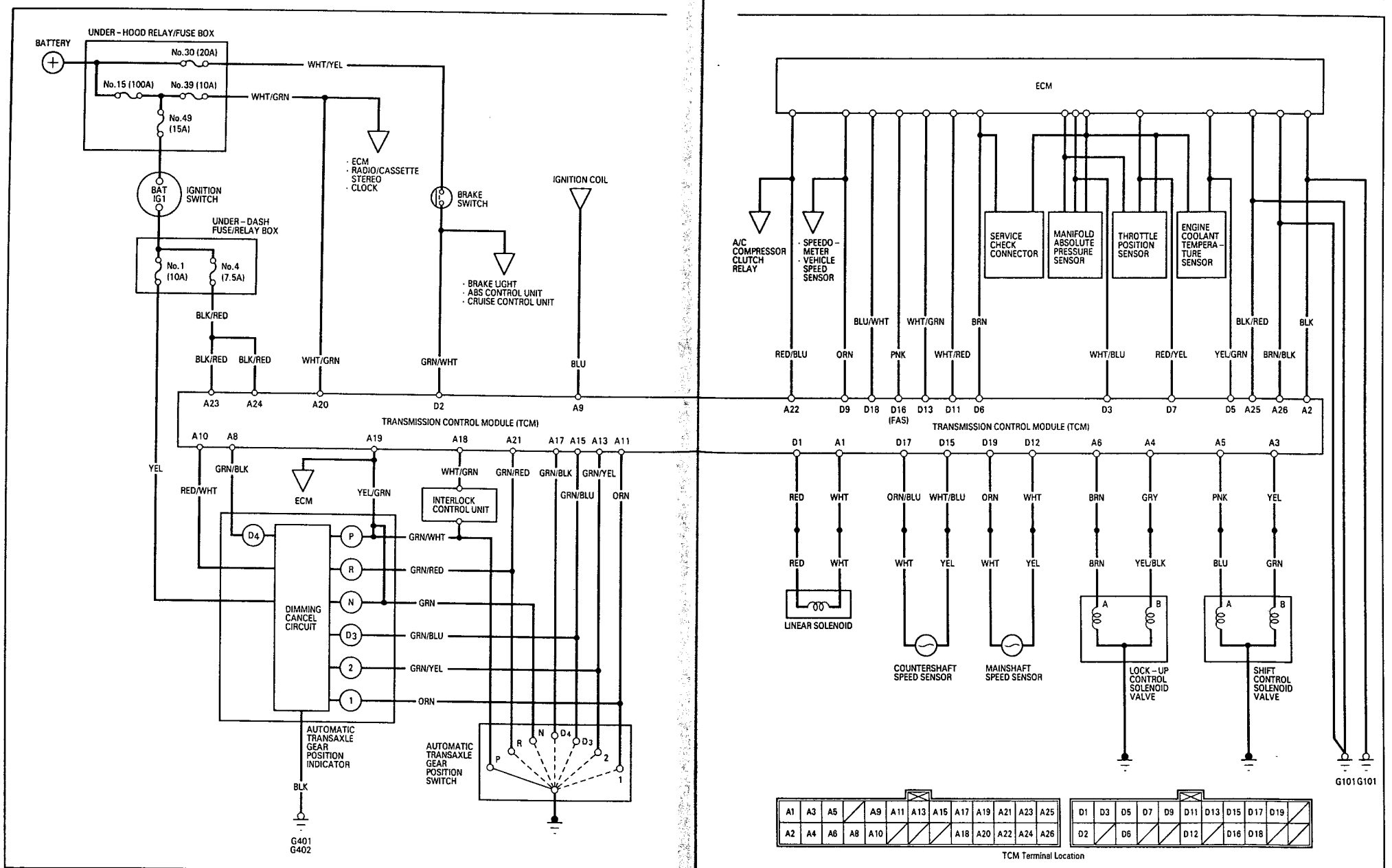

Component Location

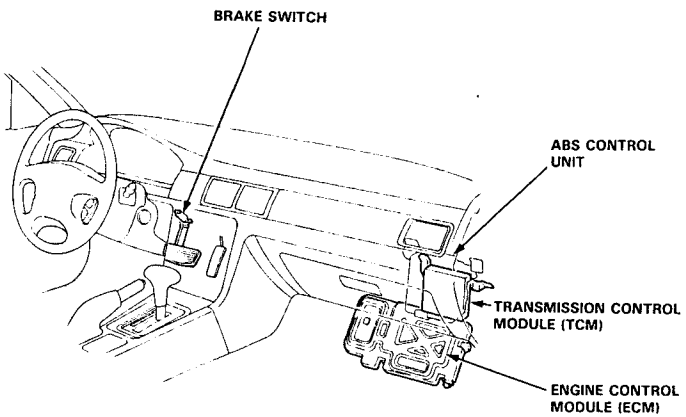

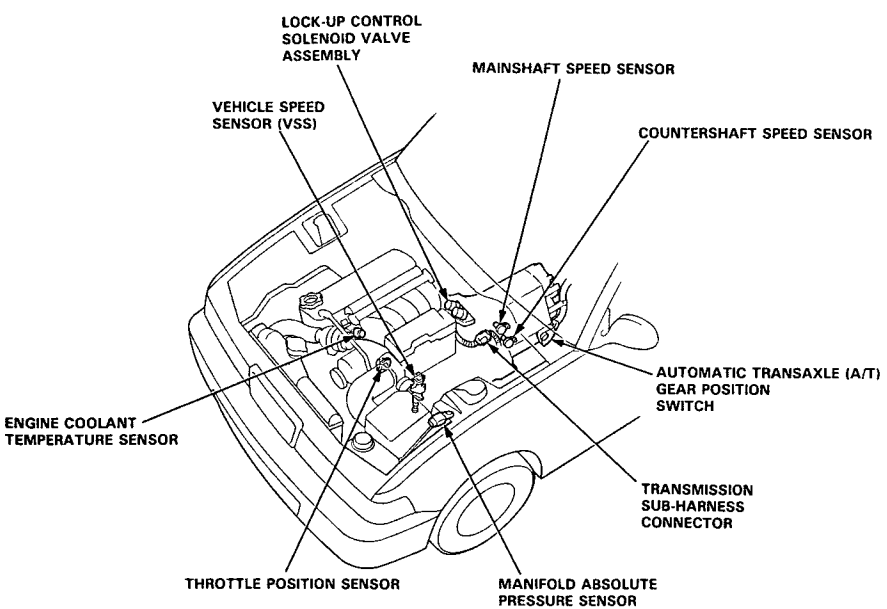

Troubleshooting Procedures

When the Transmission Control Module (TCM) senses an abnormality in the input or output systems, the D4 indicator light in the gauge assembly will blink. However, when the Service Check Connector (located under the dash on the passenger side) is connected with a jumper wire, the D4 indicator light will blink the Diagnostic Trouble Code (DTC) when the ignition switch is turned on.

When the D4 indicator light has been reported on, connect the two terminals of the Service Check Connector (2P) together. Then turn on the ignition switch and observe the D4 indicator light.

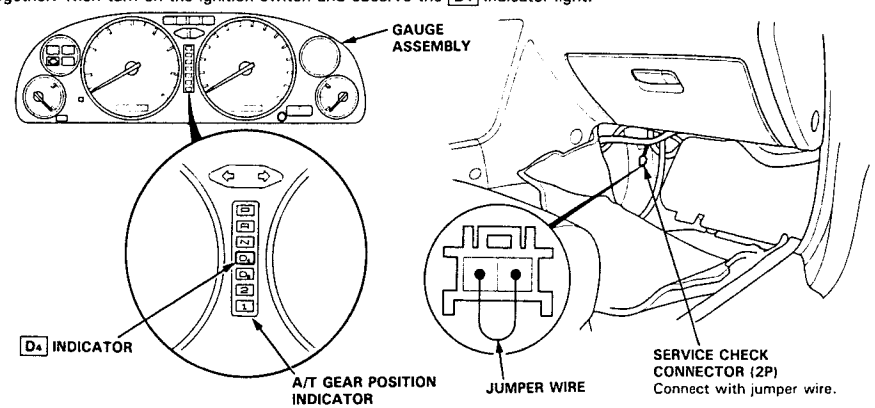

Codes 1 through 9 are indicated by individual short blinks, codes 10 through 16 are indicated by a series of long and short blinks. One long blink equals 10 short blinks. Add the long and short blinks together to determine the code. After determining the code, refer to the electrical system Symptom-to-Component Chart on pages 14-50 and 51.

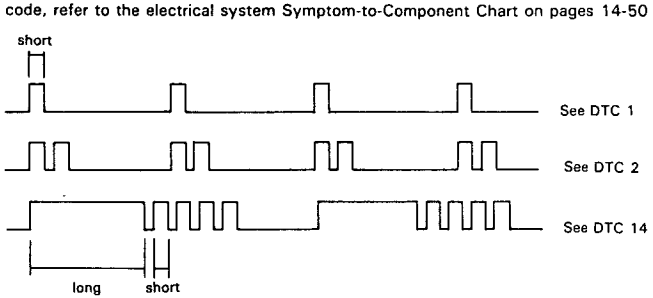

Some PGM-FI problems will also make the D4 indicator light come on. After repairing the PGM-FI system, disconnect the No. 39 BACK UP fuse (10 A) in the under-hood fuse/relay box for more than 10 seconds to reset the TCM memory.

NOTE:
- PGM-FI system
  The PGM-FI system on this model is a sequential multiport fuel injection system.
- The D4 indicator light may come on, indicating a system problem, when, in fact, there is a poor or intermittent electrical connection. First, check the electrical connections, clean or repair if necessary.
- If the electrical readings are not as specified when using the test harness, check the test harness connection before proceeding.
- Disconnecting the No. 39 BACK UP fuse in the under-hood fuse/relay box also cancels the radio anti-theft code, preset stations and the clock setting. Get the customer's code number and make note of the radio presets before removing the fuse so you can reset them.

(cont'd)

CAUTION:
- **All SRS electrical wiring harnesses are coverd with yellow outer insulation.**
- **Before disconnecting the SRS wire harness, install the short connector(s) on the airbag(s).**
- **Replace the entire affected SRS harness assembly if it has an open circuit or damaged wiring.**

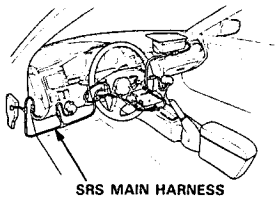

If the inspection for a particular failure code requires the use of Test Harness (07LAJ–PT3010A):

1. Remove the glove box from the dashboard.

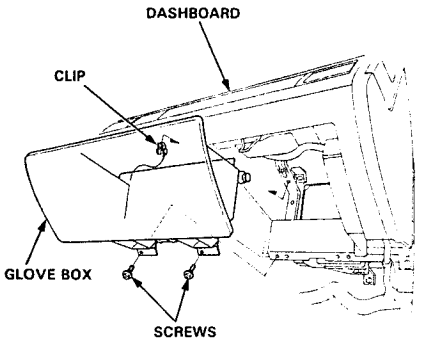

2. Remove the right door sill molding and the small cover on the right kick panel, then pull the carpet back to expose the ECM.

3. Remove the ECM cover mounting nuts and turn the ECM over.

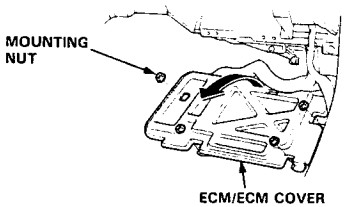

4. Remove the ABS control unit.

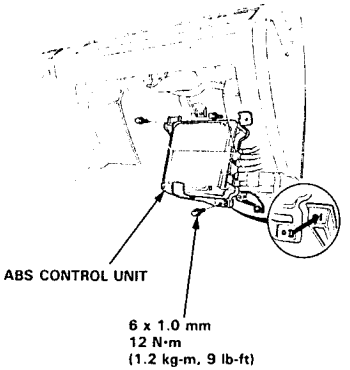

5. Remove the TCM and disconnect the wire harness connectors.

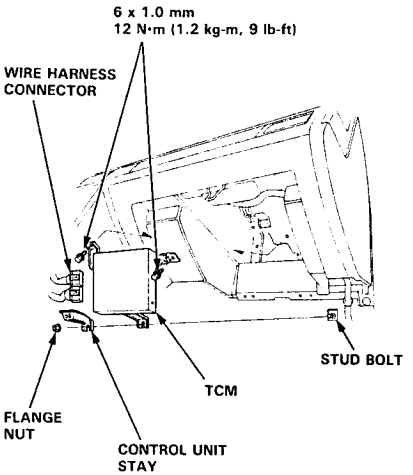

6. Connect the wire harness to the Test Harness, and/or connect the Test Harness to the TCM according to the troubleshooting flowchart.

NOTE:
- Only the A and D terminals of the Test Harness are used for A/T troubleshooting.
- Unless otherwise noted, use only the Digital Multimeter, KS–AHM–32–003, for testing.

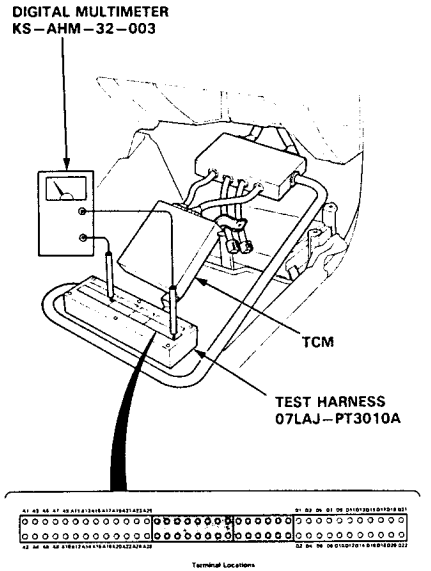

- **TCM Reset Procedure**

1. Turn the ignition switch off.
2. Remove the No. 39 BACK UP fuse (10 A) from the under-hood fuse/relay box for 10 seconds to reset the TCM.

NOTE: Disconnecting the No. 39 BACK UP fuse also cancels the radio anti-theft code, preset stations and the clock setting. Get the customer's code number and make note of the radio presets before removing the fuse so you reset them.

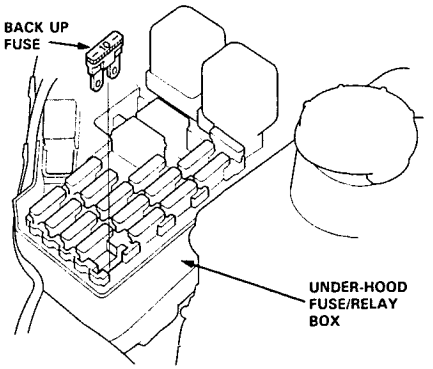

- **Final Procedure**

NOTE: This procedure must be done after any troubleshooting.

1. Remove the Jumper Wire from the Service Check Connector.
2. Reset the TCM.
3. Set the radio preset stations and clock setting.

Electrical Troubleshooting

Symptom-to-Component Chart

Number of D4 indicator light blinks while Service Check Connector is jumped.	D4 indicator light	Possible Cause	Symptom	Refer to page
1	Blinks	• Disconnected lock-up control solenoid valve A connector • Short or open in lock-up control solenoid valve A wire • Faulty lock-up control solenoid valve A	• Lock-up clutch does not engage. • Lock-up clutch does not disengage. • Unstable idle speed.	14-52
2	Blinks	• Disconnected lock-up control solenoid valve B connector • Short or open in lock-up control solenoid valve B wire • Faulty lock-up control solenoid valve B	• Lock-up clutch does not engage.	14-53
3	Blinks or OFF	• Disconnected throttle position (TP) sensor connector • Short or open in TP sensor wire • Faulty TP sensor	• Lock-up clutch does not engage.	14-54
4	Blinks	• Disconnected vehicle speed sensor (VSS) connector • Short or open in VSS wire • Faulty VSS	• Lock-up clutch does not engage.	14-55
5	Blinks	• Short in A/T gear position switch wire • Faulty A/T gear position switch	• Fails to shift other than 2nd ↔ 4th gears. • Lock-up clutch does not engage.	14-56
6	OFF	• Disconnected A/T gear position switch connector • Open in A/T gear position switch wire • Faulty A/T gear position switch	• Fails to shift other than 2nd ↔ 4th gears. • Lock-up clutch does not engage. • Lock-up clutch engages and disengages alternately.	14-58
7	Blinks	• Disconnected shift control solenoid valve A connector • Short or open in shift control solenoid valve A wire • Faulty shift control solenoid valve A	• Fails to shift (between 1st ↔ 4th, 2nd ↔ 4th or 2nd ↔ 3rd gears only). • Fails to shift (stuck in 4th gear).	14-60
8	Blinks	• Disconnected shift control solenoid valve B connector • Short or open in shift control solenoid valve B wire • Faulty shift control solenoid valve B	• Fails to shift (stuck in 1st or 4th gears).	14-61
9	Blinks	• Disconnected countershaft speed sensor connector • Short or open in the counter-shaft speed sensor wire • Faulty countershaft speed sensor	• Lock-up clutch does not engage.	14-62
10	Blinks	• Disconnected engine coolant temperature (ECT) sensor connector • Short or open in ECT sensor wire • Faulty ECT sensor	• Lock-up clutch does not engage.	14-63

Number of D4 indicator light blinks while Service Check Connector is jumped.	D4 indicator light	Possible Cause	Symptom	Refer to page
11	OFF	• Disconnected ignition coil connector • Short or open in ignition coil wire • Faulty ignition coil	• Lock-up clutch does not engage.	14-64
13	OFF	• Disconnected manifold absolute pressure (MAP) sensor connector • Short or open in MAP sensor wire • Faulty MAP sensor	• No specific symptom appears.	14-65
14	OFF	• Short or open in FAS (PNK) wire • Trouble in ECM	• Transmission jerks hard when shifting.	14-66
15	OFF	• Disconnected mainshaft speed sensor connector • Short or open in mainshaft speed sensor wire • Faulty mainshaft speed sensor	• Transmission jerks hard when shifting.	14-68
16	Blinks	• Disconnected linear solenoid connector • Short or open in linear solenoid wire • Faulty linear solenoid	• Transmission jerks hard when shifting. • Lock-up clutch does not engage.	14-70

If the self-diagnosis D4 indicator light does not blink, perform an inspection according to the table listed below.

Symptom	Probable cause	Ref. page
D4 indicator light is on steady, not blinking whenever the ignition is on.	——	14-71
D4 indicator light does not come on for 2 seconds after ignition is first turned on.	——	14-72
Lock-up clutch does not have duty operation (ON ↔ OFF).	Check A/C signal with A/C on	14-74
Lock-up clutch does not engage.		
Select lever cannot be moved from P position with the brake pedal depressed.	Check brake light signal.	14-75

- If a customer describes the symptoms for codes 3, 6, 11, 14 or 15, yet the D4 indicator light is not blinking, it will be necessary to recreate the symptom by test driving, and then checking the D4 indicator light with the ignition still ON.
- If the D4 indicator light displays codes 1, 2, 3, 7, 8, 11 or 16, check first the fuses in the under-dash fuse box and in the under-hood fuse/relay box before electrical troubleshooting. If any of the fuses have blown, repair them and then recheck.
- If the D4 indicator light displays codes other than those listed above or stays lit continuously, the TCM is faulty.
- Sometimes the D4 indicator light and the Malfunction Indicator Lamp (MIL)/Check Engine light may come on simultaneously. If so, check the PGM-FI system according to the number of blinks on the MIL, then reset the memory by removing the No. 39 BACK UP fuse in the under-hood fuse/relay box for more than 10 seconds. Drive the vehicle for several minutes at speeds over 30 mph (50 Km/h), then recheck the MIL.

NOTE:
- PGM-FI system
  The PGM-FI system on this model is a sequential multiport fuel injection system.
- The D4 indicator light may come on, indicating a system problem, when, in fact, there is a poor or intermittent electrical connection. First, check the electrical connections, clean or repair if necessry.
- If the electrical readings are not as specified when using the test harness, check the test harness connection before proceeding.
- Disconnecting the No. 39 BACK UP fuse in the under-hood fuse/relay box also cancels the radio anti-theft code, preset stations and the clock setting. Get the customer's code number and make note of the radio presets before removing the fuse so you can reset them.

Electrical Troubleshooting

Troubleshooting Flowchart

Possible Cause

- Disconnected lock-up control solenoid valve A connector
- Short or open in lock-up control solenoid valve A wire
- Faulty lock-up control solenoid valve A

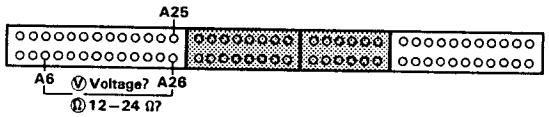

Sefl-diagnosis D4 indicator light blinks once.

Disconnect the 26P connector from the TCM.
Connect the Test Harness "A" connector to the wire harness only, not to the TCM (14-48 and 49).

Turn the ignition switch ON.

Measure the voltage between the A6 and A25/A26 terminals.

Is there voltage?
- YES → Repair short to power source in BRN wire between the A6 terminal and the lock-up control solenoid valve A.
- NO ↓

Turn the ignition switch OFF.

Measure the resistance between the A6 and A25/A26 terminals.

Is the resistance 12-24 Ω?
- YES → Check for loose TCM connectors. If necessary, substitute a known-good TCM and recheck.
- NO ↓

Disconnect the 2P connector from the lock-up control solenoid valve assembly.

Check for continuity between the A6 and A25/A26 terminals.

Is there continuity?
- YES → Repair short to ground in BRN wire between the A6 terminal and the lock-up control solenoid valve A.
- NO ↓

Measure the resistance of the solenoid at the 2P connector (14-78).

Is the resistance 12-24 Ω?
- YES → Check for open in BRN wire between the A6 terminal and the lock-up control solenoid valve A.
- NO ↓

Replace the lock-up control solenoid valve assembly.

Possible Cause

- Disconnected lock-up control solenoid valve B connector
- Short or open in lock-up control solenoid valve B wire
- Faulty lock-up control solenoid valve B

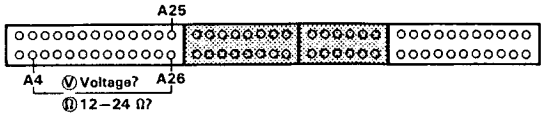

Self-diagnosis D4 indicator light blinks twice.

Disconnect the 26P connector from the TCM.
Connect the Test Harness "A" connector to the wire harness only, not to the TCM (14-48 and 49).

Turn the ignition switch ON.

Measure the voltage between the A4 and A25/A26 terminals.

Is there voltage?
- YES → Repair short to power source in GRY wire between the A4 terminal and the lock-up control solenoid valve B.
- NO ↓

Turn the ignition switch OFF.

Measure the resistance between the A4 and A25/A26 terminals.

Is the resistance 12–24 Ω?
- YES → Check for loose TCM connectors. If necessary, substitute a known-good TCM and recheck.
- NO ↓

Disconnect the 2P connector from the lock-up control solenoid valve assembly.

Check for continuity between the A4 and A25/A26 terminals.

Is there continuity?
- YES → Repair short to ground in GRY wire between the A4 terminal and the lock-up control solenoid valve B.
- NO ↓

Measure the resistance of the solenoid at the 2P connector (14-78).

Is the resistance 12–24 Ω?
- YES → Check for open in GRY wire between the A4 terminal and the lock-up control solenoid valve B.
- NO ↓

Replace the lock-up control solenoid valve assembly.

(cont'd)

Troubleshooting Flowchart (cont'd)

Self-diagnosis D4 indicator light blinks three times.

Turn the ignition switch ON.

Check whether the Malfunction Indicator Lamp (MIL) blinks (see section 11).

Is the MIL blinking?
- YES → **Repair the PGM-FI System (see section 11).**
- NO ↓

Turn the ignition switch OFF.

Disconnect the 26P and 22P connectors from the TCM.
Connect the Test Harness "A" and "D" connectors to the wire harness only, not to the TCM (14-48 and 49).

Turn the ignition switch ON.

Measure the voltage between the D18 and A25/A26 terminals.

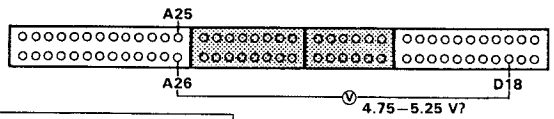

Is the voltage 4.75–5.25 V?
- NO → **Repair open or short in BLU/WHT wire between the D18 terminal and the ECM.**
- YES ↓

Turn the ignition switch OFF.

Connect the Test Harness "A" and "D" connectors to the TCM.

Turn the ignition switch ON.

Measure the voltage between the D7 and A25/A26 terminals.

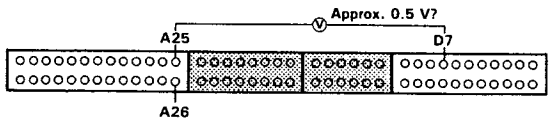

Is the voltage approx. 0.5 V?
- NO → **Repair open or short in RED/YEL wire between the D7 terminal and the TP sensor.**
- YES ↓

Check for loose TCM connectors. If necessary, substitute a known-good TCM and recheck.

Possible Cause
• Disconnected throttle position (TP) sensor connector • Short or open in TP sensor wire • Faulty TP sensor

Self-diagnosis D4 indicator light blinks four times.

Possible Cause
• Disconnected vehicle speed sensor (VSS) connector • Short or open in VSS wire • Faulty VSS

⚠ WARNING Make sure lifts, jacks and safety stands are placed properly (section 1).

Does the speedometer operate?
- NO → **Refer to Section 23 for speedometer/vehicle speed sensor test.**
- YES ↓

Raise the car.

Shift transmission to N position.

Disconnnect the 26P and 22P connectors from the TCM.
Connect the Test Harness "A" and "D" connectors to the wire harness only, not to the TCM (14-48 and 49).

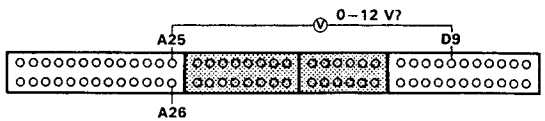

Turn the ignition switch ON.

Rotate the front wheel and check for voltage between the D9 and A25/A26 terminals. Block the other wheel so it does not turn.

Does the voltage 0–12 V appear alternately?
- NO → **Check for short or open in ORN wire between the D9 terminal and the VSS. If wire is OK, check the VSS (see section 23).**
- YES ↓

Check for loose TCM connectors. If necessary, substitute a known-good TCM and recheck.

(cont'd)

Troubleshooting Flowchart (cont'd)

Self-diagnosis D4 indicator light blinks five times.

Possible Cause
• Short in A/T gear position switch wire • Faulty A/T gear position switch

NOTE: Code 5 is caused when the TCM receives two gear position inputs at the same time.

Turn the ignition switch ON.

Observe the A/T gear position indicator and select each position separately.

Do any indicators fail to light when shifting through all positions?

- YES → See A/T gear position indicator inspection (see section 23).
- NO ↓

Turn the ignition switch OFF.

Connect the Test Harness between the TCM and connectors (14-48 and 49).

Turn the ignition switch ON.

Shift to other than R position.

Measure the voltage between the A21 and A25/A26 terminals.

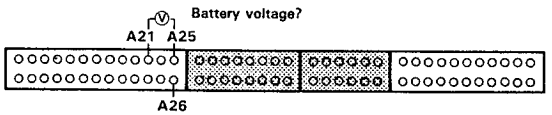

Is there battery voltage?

- NO → Check for short in GRN/RED wire between the A21 terminal and the A/T gear position switch or A/T gear position indicator. If wire is OK, check for loose TCM connectors. If necessary, substitute a known-good TCM and recheck.
- YES ↓

Shift to other than N and P positions.

Measure the voltage between the A19 and A25/A26 terminals.

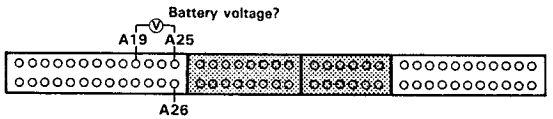

Is there battery voltage?

- NO → Check for short in YEL/GRN wire between the A19 terminal and the A/T gear position indicator or short in GRN/WHT or GRN wire between the A/T gear position indicator and the A/T gear position switch. If wire is OK, check for loose TCM connectors. If necessary, substitute a known-good TCM and recheck.
- YES ↓

To page 14-57

From page 14-56

Shift to other than D4 position.

Measure the voltage between the A17 and A25/A26 terminals.

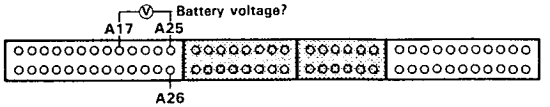

Is there battery voltage?

- NO → Check for short in GRN/BLK wire between the A17 terminal and the A/T gear position switch. If wire is OK, check for loose TCM connectors. If necessary, substitute a known-good TCM and recheck.
- YES ↓

Shift to other than D3 position.

Measure the voltage between the A15 and A25/A26 terminals.

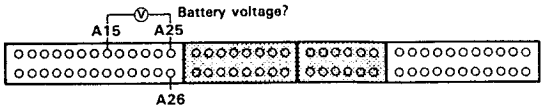

Is there battery voltage?

- NO → Check for short in GRN/BLU wire between the A15 terminal and the A/T gear position switch or A/T gear position indicator. If wire is OK, check for loose TCM connectors. If necessary, substitute a known-good TCM and recheck.
- YES ↓

Shift to other than 2 position.

Measure the voltage between the A13 and A25/A26 terminals.

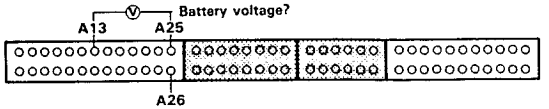

Is there battery voltage?

- NO → Check for short in GRN/YEL wire between the A13 terminal and the A/T gear position switch or A/T gear position indicator. If wire is OK, check for loose TCM connectors. If necessary, substitute a known-good TCM and recheck.
- YES ↓

Shift to other than 1 position.

Measure the voltage between the A11 and A25/A26 terminals.

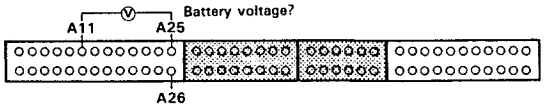

Is there battery voltage?

- NO → Check for short in ORN wire between the A11 terminal and the A/T gear position switch or A/T gear position indicator. If wire is OK, check for loose TCM connectors. If necessary, substitute a known-good TCM and recheck.
- YES ↓

Check for loose TCM connectors. If necessary, substitute a known-good TCM and recheck.

(cont'd)

Troubleshooting Flowchart (cont'd)

Self-diagnosis D4 indicator light blinks six times.

Connect the Test Harness between the TCM and connectors (14-48 and 49).

Turn the ignition switch ON.

Shift to R position.

Measure the voltage between the A21 and A25/A26 terminals.

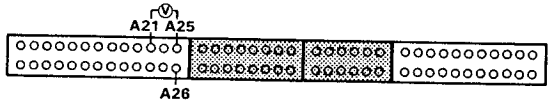

Is there voltage?

YES → **Repair open in GRN/RED wire between the A21 terminal and the A/T gear position switch.**

NO

Shift to N or P position.

Measure the voltage between the A19 and A25/A26 terminals.

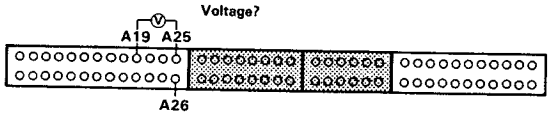

Is there voltage?

YES → **Repair open in YEL/GRN wire between the A19 terminal and the A/T gear position indicator.**

NO

To page 14-59

Possible Cause
• Disconnected A/T gear position switch connector • Open in A/T gear position wire • Faulty A/T gear position switch

NOTE: Code 6 is caused when the TCM receives an input for any gear.

From page 14-58

Shift to D4 position.

Measure the voltage between the A17 and A25/A26 terminals.

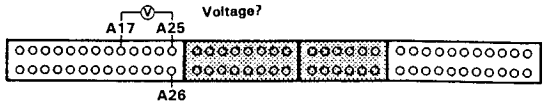

Is there voltage?

YES → **Repair open in GRN/BLK wire between the A17 terminal and the A/T gear position switch.**

NO

Shift to D3 position.

Measure the voltage between the A15 and A25/A26 terminals.

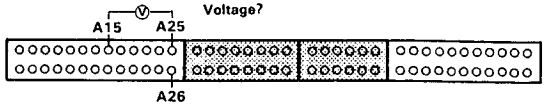

Is there voltage?

YES → **Repair open in GRN/BLU wire between the A15 terminal and the A/T gear position switch.**

NO

Shift to 2 position.

Measure the voltage between the A13 and A25/A26 terminals.

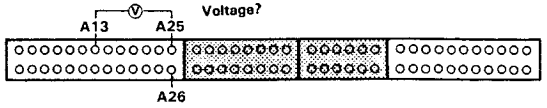

Is there voltage?

YES → **Repair open in GRN/YEL wire between the A13 terminal and the A/T gear position switch.**

NO

Shift to 1 position.

Measure the voltage between the A11 and A25/A26 terminals.

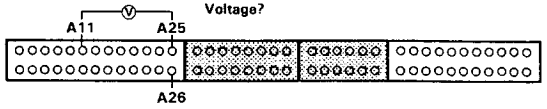

Is there voltage?

YES → **Repaiar open in ORN wire between the A11 terminal and the A/T gear position switch.**

NO

Check for loose TCM connectors. If necessary, substitute a known-good TCM and recheck.

(cont'd)

Troubleshooting Flowchart (cont'd)

Self-diagnosis D4 indicator light blinks seven times.

Disconnect the 26P connector from the TCM.
Connect the Test Harness "A" connector to the wire harness only, not to the TCM (14-48 and 49).

Turn the ignition switch ON.

Measure the voltage between the A5 and A25/A26 terminals.

Is there voltage?
- YES → **Repair short to power source in PNK wire between the A5 terminal and the shift control solenoid valve A.**
- NO ↓

Turn the ignition switch OFF.

Measure the resistance between the A5 and A25/A26 terminals.

Is the resistance 12–24 Ω?
- YES → **Check for loose TCM connectors. If necessary, substitute a known-good TCM and recheck.**
- NO ↓

Disconnect the 2P connector from the shift control solenoid valve assembly.

Check for continuity between the A5 and A25/A26 terminals.

Is there continuity?
- YES → **Repair short to ground in PNK wire between the A5 terminal and the shift control solenoid valve A.**
- NO ↓

Measure the resistance of the solenoid at the 2P connector (14-80).

Is the resistance 12-24 Ω?
- YES → **Check for open in PNK wire between the A5 terminal and the shift control sodenoid valve A.**
- NO ↓

Replace the shift control solenoid valve assembly.

Possible Cause
- **Disconnected shift control solenoid valve A connector**
- **Short or open in shift control solenoid valve A wire**
- **Faulty shift control solenoid valve A**

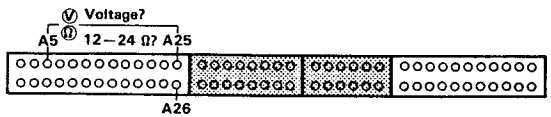

Self-diagnosis D4 indicator light blinks eight times.

Disconnect the 26P connector from the TCM.
Connect the Test Harness "A" connector to the wire harness only, not to the TCM (14-48 and 49).

Turn the ignition switch ON.

Measure the voltage between the A3 and A25/A26 terminals.

Is there voltage?
- YES → **Repair short to power source in YEL wire between the A3 terminal and shift control solenoid valve B.**
- NO ↓

Turn the ignition switch OFF.

Measure the resistance between the A3 and A25/A26 terminals.

Is the resistance 12–24 Ω?
- YES → **Check for loose TCM connectors. If necessary, substitute a known-good TCM and recheck.**
- NO ↓

Disconnect the 2P connector from the shift control solenoid valve assembly.

Check for continuity between the A3 and A25/A26 terminals.

Is there continuity?
- YES → **Repair short to ground in YEL wire between the A3 terminal and the shift control solenoid valve B.**
- NO ↓

Measure the resistance of the solenoid at the 2P connector (14-80).

Is the resistance 12–24 Ω?
- YES → **Check for open in YEL wire between the A3 terminal and the shift control solenoid valve B.**
- NO ↓

Replace the shift control solenoid valve assembly.

Possible Cause
- **Disconnected shift control solenoid valve B connector**
- **Short or open in shift control solenoid valve B wire**
- **Faulty shift control solenoid valve B**

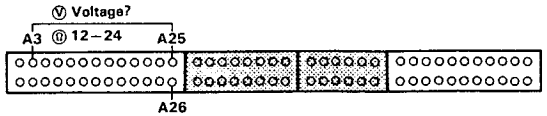

(cont'd)

Troubleshooting Flowchart (cont'd)

Self-diagnosis D4 indicator light blinks nine times.

Possible Cause
- Loose or faulty connection between the TCM and car harness
- Disconnected countershaft speed sensor connector
- Short or open in countershaft speed sensor wire
- Faulty countershaft speed sensor

Is the countershaft speed sensor installed properly?
- NO → **Reinstall and recheck.**
- YES ↓

Disconnect the 2P connector from the countershaft speed sensor connector.

Measure the resistance of the countershaft speed sensor.

Is the resistance 400–600 Ω? (at 70°F, 20°C)
- NO → **Replace the countershaft speed sensor.**
- YES ↓

Disconnect the 22P connector from the TCM.
Connect the Test Harness "D" connector to the wire harness only, not to the TCM (14-48 and 49).

Check for continuity between the D15 terminal and body ground.
Check for continuity between the D17 terminal and body ground.

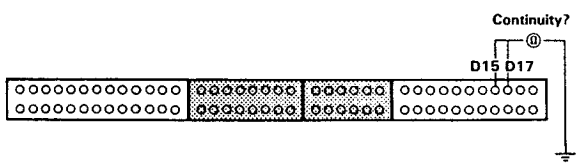

Is there continuity?
- YES → **Repair short in WHT/BLU or ORN/BLU wire between the countershaft speed sensor and body ground.**
- NO ↓

Reconnect the countershaft speed sensor connentor.

Measure the resistance between D15 and D17 terminals.

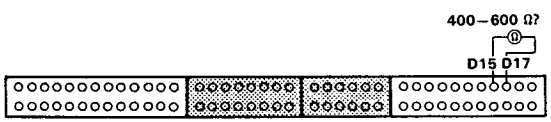

Is the resistance 400–600 Ω? (at 70°F, 20°C)
- NO → **Repair open in WHT/BLU or ORN/BLU wire between 22P connector and the countershaft speed sensor.**
- YES ↓

Check for loose TCM connectors. If necessary, substitute a known-good TCM and recheck.

Self-diagnosis D4 indicator light blinks ten times.

Possible Cause
- Disconnected engine coolant temperature (ECT) sensor connector
- Short or open in ECT sensor wire
- Faulty ECT sensor

Turn the ignition switch ON.

Check whether the Malfunction Indicator Lamp (MIL) blinks (see section 11).

Is the MIL blinking?
- YES → **Repair the PGM-FI System (see section 11).**
- NO ↓

Turn the ignition switch OFF.

Disconnect the 26P and 22P connectors from the TCM.
Connect the Test Harness "A" and "D" connectors to the wire harness only, not to the TCM (14-48 and 49).

Turn the ignition switch ON.

Measure the voltage between the D18 and A25/A26 terminals.

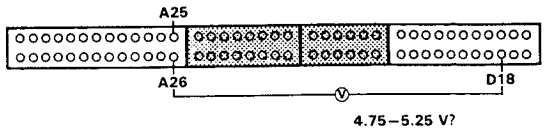

Is the voltage 4.75–5.25 V?
- NO → **Repair open or short in BLU/WHT wire between the D18 terminal and the ECM.**
- YES ↓

Turn the ignition switch OFF.

Connect the Test Harness "A" and "D" connectors to the TCM.

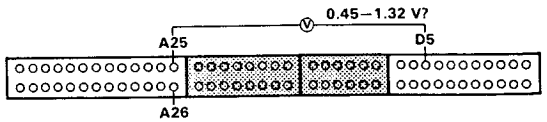

Start the engine and warm it up to normal operating temperature. (the radiator fan coms on).

Measure the voltage between the D5 and A25/A26 terminals.

Is the voltage 0.45–1.32 V?
- NO → **Repair open or short in YEL/GRN wire between the D5 terminal and the ECT sensor.**
- YES ↓

Check for loose TCM connectors. If necessary, substitute a known-good TCM and recheck.

(cont'd)

Electrical Troubleshooting

Troubleshooting Flowchart (cont'd)

Self-diagnosis D4 indicator light blinks eleven times.

Disconnect the 26P connector from the TCM.
Connect the Test Harness "A" connector to the wire harness only, not to the TCM (14-48 and 49).

Turn the ignition switch ON.

Measure the voltage between the A9 and A25/A26 terminals.

Is there battery voltage?

NO → **Repair open or short in BLU wire between the A9 terminal and the ignition coil.**

YES → **Check for loose TCM connectors. If necessary, substitute a known-good TCM and recheck.**

Possible Cause
• Disconnected ignition coil connector • Short or open in ignition coil wire • Faulty ignition coil

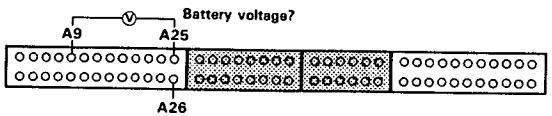

Self-diagnosis D4 indicator light blinks thirteen times.

Turn the ignition switch ON.

Check whether the Malfunction Indicator Lamp (MIL) blinks (see section 11).

Is the MIL blinking?

YES → **Repair the PGM-FI System (see section 11).**

NO

Turn the ignition switch OFF.

Disconnect the 26P and 22P connectors from the TCM.
Connect the Test Harness "A" and "D" connectors to the wire harness only, not to the TCM (14-48 and 49).

Turn the ignition switch ON.

Measure the voltage between the D18 and A25/A26 terminals.

Is the voltage 4.75–5.25 V?

NO → **Repair open or short in BLU/WHT wire between the D18 terminal and the ECM.**

YES

Turn the ignition switch OFF.

Connect the Test Harness "A" and "D" connectors to the TCM.

Turn the ignition switch ON.

Measure the voltage between the D3 and A25/A26 terminals.

Is the voltage approx. 5 V?

NO → **Repair open or short in WHT/BLU wire between the D3 terminal and the MAP sensor.**

YES

Check for loose TCM connectors. If necessary, substitute a known-good TCM and recheck.

Possible Cause
• Disconnected manifold absolute pressure (MAP) sensor connector • Short or open in MAP sensor wire • Faulty MAP sensor

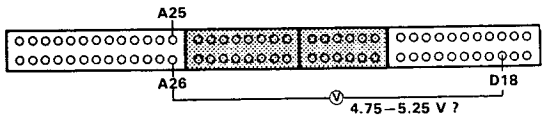

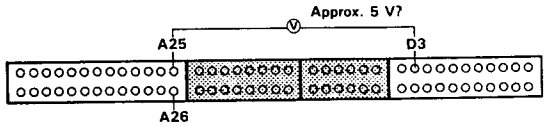

(cont'd)

Troubleshooting Flowchart (cont'd)

Self-diagnosis D4 indicator light blinks fourteen times.

Possible Cause
• Short or open in FAS (PNK) wire • Trouble in ECM

Is the Malfunction Indicator Lamp (MIL) on?

YES → Repair the PGM-FI System (see section 11).

NO

Start the engine and warm it up to normal operating temperature (the radiator fan comes on).

Shift to P position.

Turn the ignition switch OFF.

Connect the Test Harness between the TCM and connectors (14-48 and 49).

Turn the ignition switch ON and wait for at least two seconds.

Measure the voltage between the D16 (+) and A25/A26 (−) terminals.

Is there approx. 5 V?

YES → Check foe loose TCM connectors. If necessary, substitute a known-good TCM and recheck.

NO

Turn the ignition switch OFF.

Disconnect the Test Harness from the TCM.
Leave connected to car harness.

Turn the ignition switch ON.

To page 14-67

⚠ WARNING

- Make sure lifts, jacks and safety stands are placed properly (see section 1).
- While testing, be careful of the rotating front wheels.

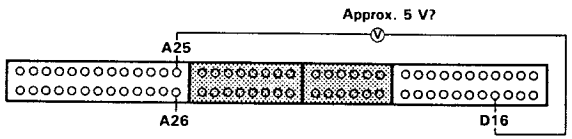

From page 14-66

Measure the voltage between the D16 (+) and A25/A26 (−) terminals

Is there approx. 5 V?

YES → Check for loose TCM connectors. If necessary, substitute a known-good TCM and recheck.

NO

Disconnect the 26P connector from the ECM.

Check for continuity between the D16 and A25/A26 terminals of the Test Harness.

Is there continuity?

NO → Repair short in PNK (FAS) wire between TCM and ECM.

YES

Check for continuity on the PNK wire between the D16 terminal on the TCM and the A18 terminal on the ECM.

Is there continuity?

YES → Check for loose TCM connectors. If necessary, substitute a known-good TCM and recheck.

NO

Repair short in PNK (FAS) wire between TCM and ECM.

(cont'd)

Troubleshooting Flowchart (cont'd)

Self-diagnosis D4 indicator light blinks fifteen times.

Possible Cause
• Disconnected mainshaft speed sensor connector • Short or open in mainshaft speed sensor wire • Faulty mainshaft speed sensor

Are the mainshaft and countershaft speed sensors installed properly?
- NO → **Reinstall and recheck.**
- YES ↓

Disconnect the 2P connector from the mainshaft speed sensor.

Measure the resistance of the mainshaft speed sensor.

Is the resistance 400–600 Ω? (at 70°F, 20°C)
- NO → **Replace the mainshaft speed sensor.**
- YES ↓

Disconnect the 22P connector from the TCM.
Connect the Test Harness "D" connector to the wire harness only, not to the TCM (14-48 and 49).

Check the continuity between D19 and D12 terminals and body ground.

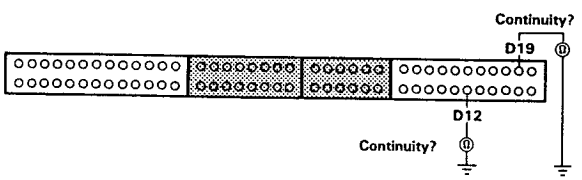

Is there continuity?
- YES → **Repair short in ORN or WHT wire between D19 and D12 terminals and the mainshaft speed sensor.**
- NO ↓

Reconnect the 2P connector to the mainshaft speed sensor.

To page 14-69

NOTE: A code 15 on the TCM doesn't always mean there's an electrical problem in the mainshaft or countershaft speed sensor circuit; code 15 may also indicate a mechanical problem in the transmission

From page 14-68

Measure the resistance between D19 and D12 terminals.

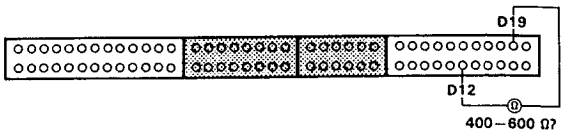

Is the resistance 400–600 Ω? (at 70°F, 20°C)
- NO → Check for continuity between D19 terminal and the mainshaft speed sensor.
  - Is there continuity?
    - NO → **Repair open in ORN wire between D19 terminal and the mainshaft speed sensor.**
    - YES ↓
  - Check for continuity between D12 terminal and the mainshaft speed sensor.
  - Is the continuity?
    - NO → **Repair open in WHT wire between D12 terminal and the mainshaft speed sensor.**
    - YES ↓
  - **Check for loose TCM connectors. If necessary, substitute a known-good TCM and recheck.**
- YES ↓

Run Electrical Troubleshooting for code 9. Check for loose TCM connector. If necessary, substitute a known-good TCM and recheck.

(cont'd)

Electrical Troubleshooting

Troubleshooting Flowchart (cont'd)

Self-diagnosis D4 indicator light blinks sixteen times.

Possible Cause
- **Disconnected linear solenoid connector**
- **Short or open in linear solenoid wire**
- **Faulty linear solenoid**

Disconnect the 26P and 22P connectors from the TCM.
Connect the Test Harness "A" and "D" connectors to the wire harness only, not to the TCM (14-48 and 49).

Check for continuity to body ground on the A1 and D1 terminals individually.

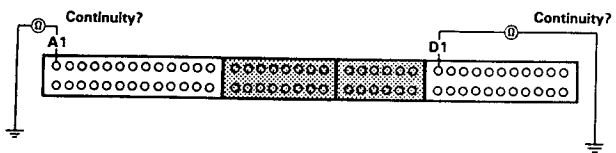

Is there continuity?
- YES → **Repair short in RED or WHT wire between A1 and D1 terminals and the linear solenoid connector.**
- NO ↓

Measure the resistance between the A1 and the D1 terminals.

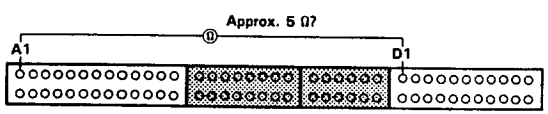

Is the resistance approximately 5 Ω?
- YES → **Check for loose TCM connectors. If necessary, substitute a known-good TCM and recheck.**
- NO ↓

Disconnect the connector from the linear solenoid.

Measure the resistance between two terminals of the linear solenoid connector (14-81).

Is the resistance approximately 5 Ω?
- NO → **Check the Linear Solenoid. (see pages 14-81 and 133).**
- YES ↓

Repair open in RED or WHT wire between A1 and D1 terminals and the linear solenoid connector.

D4 indicator light is on steady, not blinking whenever the ignition switch is turned ON.

Check the A/T gear position switch.

Is the A/T gear position switch OK?
- NO → **Replace the A/T gear position switch (see page 14-82).**
- YES ↓

Shift to P position.

Disconnect the 26P connector from the TCM.
Connect the Test Harness "A" connector to the wire harness only, not to the TCM (14-48 and 49).

Turn the ignition switch ON.

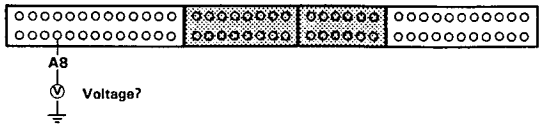

Measure the voltage between the A8 terminal and body ground.

Is there voltage?
- YES → **Replace the TCM.**
- NO ↓

Connect the Test Harness "A" connector to the TCM.

Measure the voltage between the GRN/BLK wire at the gauge assembly and body ground.

Is there voltage?
- NO → **Replace faulty A/T gear position indicator.**
- YES ↓

Repair short to power source on GRN/BLK wire between the A8 terminal and gauge assembly.

(cont'd)

Troubleshooting Flowchart (cont'd)

D4 indicator light does not come on with the ignition switch ON. (It should come on for about 2 seconds.)

Is the service check connector jumped? — YES → Disconnect the jumper wire and recheck.

NO

Shift to D4 position.

Does the D4 indicator light come on? — YES → Check for loose TCM connectors. If necessary, substitute a known-good TCM and recheck.

NO

Turn the ignition switch OFF.

Disconnect the 26P connector from the TCM.
Connect the Test Harness "A" connector to the wire harness only, not to the TCM (14-48 and 49).

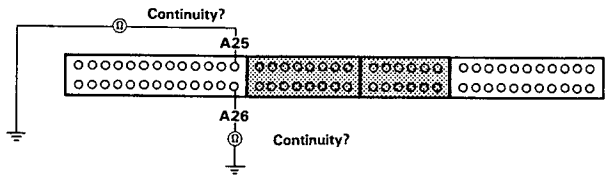

Check for continuity between the A25 terminal and body ground and A26 and body ground.

Is there continuity? — NO → Repair open BLK/RED or BRN/BLK wire(s) between A25 or A26 terminal(s) and G101.

YES

Turn the ignition switch ON.

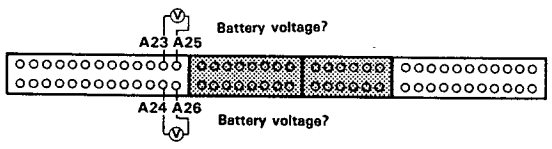

Measure the voltage between the A23 or A24 and A25 or A26 terminals.

Is there battery voltage? — NO → Repair open or short BLK/RED wire between the A23 and/or A24 terminals and under-dash fuse box.

YES

Turn the ignition switch OFF.

To page 14-73

From page 14-72

Connect the Test Harness "A" connector to the TCM.

Turn the ignition switch ON. Be sure that voltage is available for 2 seconds between the A8 terminal and A25/A26 terminal.

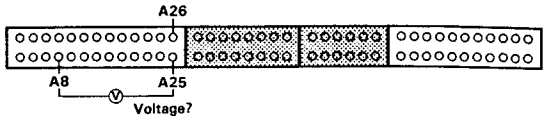

Is there voltage? — YES → Check for open or short in GRN/BLK wire between the A8 terminal and the gauge assembly.

NO

Turn the ignition switch OFF.

Disconnect the Test Harness "A" connector from the TCM.

Check for continuity between the A8 terminal and the GRN/BLK wire at the gauge assembly.

Is there continuity? — NO → Repair open in GRN/BLK wire between the A8 terminal and the gauge assembly.

YES

Check for loose TCM connectors. Check the A/T gear position switch. If necessary, substitute a known-good TCM and recheck.

(cont'd)

Troubleshooting Flowchart (cont'd)

Symptom
- Lock-up clutch does not have duty operation (ON↔OFF).
- Lock-up clutch does not engage.

Inspection of the A/C signal.

Start the engine.

Turn the blower switch ON.

Push the A/C switch ON.

Does A/C compressor clutch engage?

NO → See Air Conditioning Inspection (see section 22).

YES

Stop the engine.

Disconnect the 26P connector from the TCM.
Connect the Test Harness "A" connector to the wire harness only, not to the TCM (14-48 and 49).

Start the engine.

Measure the voltage between the A22 and A25/A26 terminals. (A/C compressor OFF)

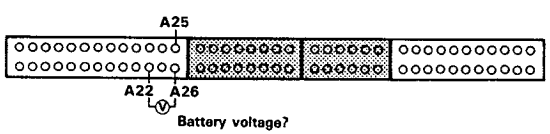

Is there battery voltage?

NO → Repair open in RED/BLU wire between the A22 terminal and A/C compressor clutch relay.

YES

- A/C signal is OK.
- Check for loose TCM connectors. If necessary, substitute a known-good TCM and recheck.
- Inspect the Air conditioning (see section 22).

Symptom
Shift lever cannot be moved from P position with the brake pedal depressed.

Inspection of the brake switch signal.

Check that the brake lights come on with the brake pedal depressed.

Are brake lights ON?

NO → Repair faulty brake switch circuit.

YES

Disconnect the 26P and 22P connectors from the TCM.
Connect the Test Harness "A" and "D" connectors to the wire harness only, not to the TCM (14-48 and 49).

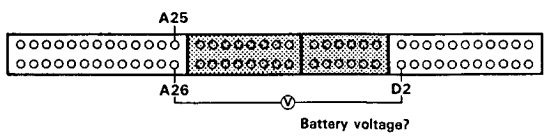

Measure the voltage between the D2 and A25/A26 terminals with the brake pedal depressed.

Is there battery voltage?

NO → Repair open in GRN/WHT wire between the D2 terminal and brake switch.

YES

- Brake switch signal is OK.
- Check for loose TCM connectors. If necessary, substitute a known-good TCM and recheck.
- Inspect the brake switch circuit (see section 23).

Transmission Control Module (TCM)

Replacement

CAUTION:
- **All SRS electrical wiring harnesses are covered with yellow outer insulation.**
- **Before disconnecting the SRS wire harness, install the short connector(s) on the airbag(s).**
- **Replace the entire affected SRS harness assembly if it has an open circuit or damaged wiring.**

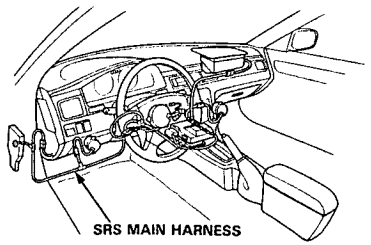

1. Remove the glove box from the dashboard.

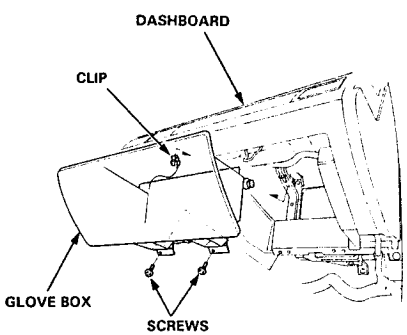

2. Remove the right door sill molding and the small cover on the right kick panel, then pull the carpet back to expose the ECM.

3. Remove the ECM cover mounting nuts and turn the ECM over.

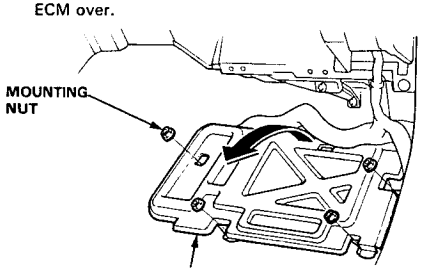

4. Remove the ABS control unit.

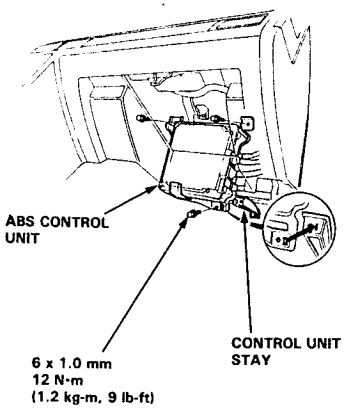

5. Remove the TCM and disconnect the wire harness connectors.

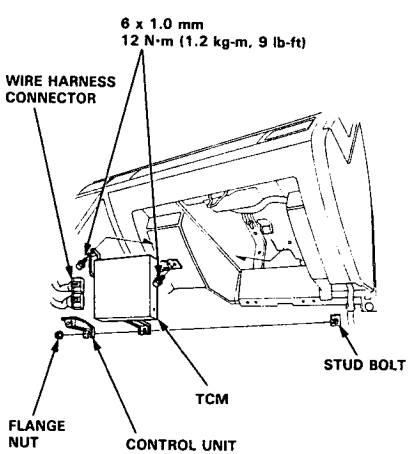

Mainshaft/Countershaft Speed Sensors

Replacement

⚠WARNING Make sure lifts, jacks and safety stands are placed properly (see section 1).

1. Raise the car.

2. Remove the transmission mount and mount bracket.

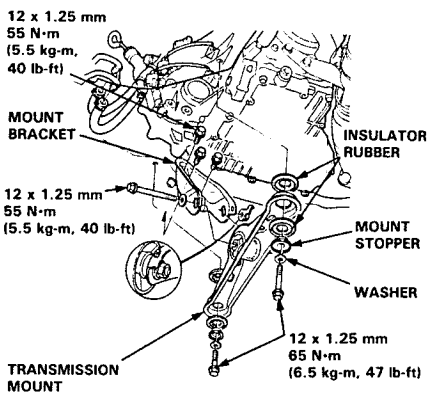

3. Disconnect the mainshaft and countershaft speed sensor connectors.

4. Remove the 6 mm bolt(s) from the transmission housing and remove the mainshaft and/or countershaft speed sensor(s).

5. Replace the O-rings with new ones before reassembling the mainshaft and countershaft speed sensors.

   NOTE: Install the mainshaft speed sensor with the mainshaft speed sensor washer. The countershaft speed sensor has no washer.

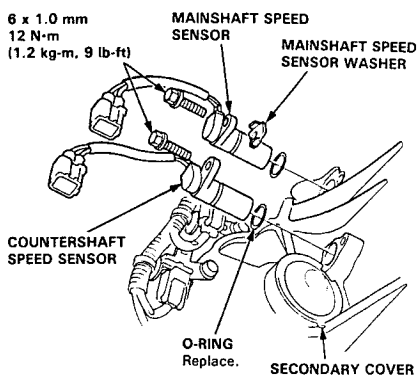

Lock-up Control Solenoid Valve A/B

Test

NOTE: Lock-up control solenoid valves A and B must be removed/replaced as an assembly.

1. Disconnect the transmission sub-harness connector.

2. Measure the resistance between the No. 1 terminal (solenoid valve A) of the transmission sub-harness connector and body ground and between the No. 2 terminal (solenoid valve B) and body ground.

   STANDARD: 12–24 Ω

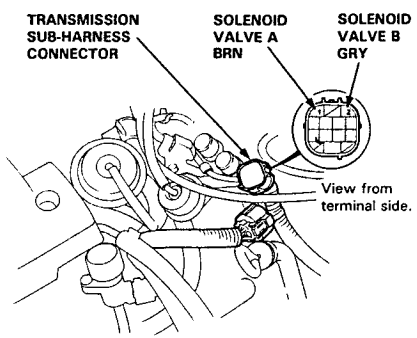

3. If the resistance is out of specification, disconnect the connector from the lock-up control solenoid valve A/B.

4. Measure the resistance between the No. 1 terminal (solenoid valve A) of the lock-up control solenoid valve connector and body ground and between the No. 2 terminal (solenoid valve B) and body ground.

   STANDARD: 12–24 Ω

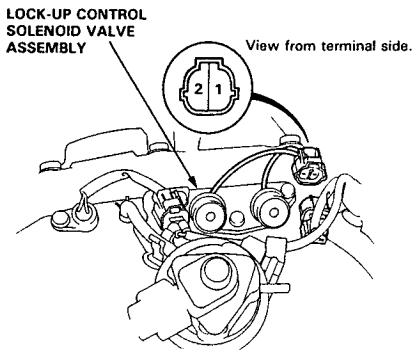

5. If the resistance is OK, replace the transmission sub-harness.

6. Replace the lock-up control solenoid valve assembly if the resistance is out of specification.

7. If the resistance is within the standard, connect the No. 1 terminal of the lock-up control solenoid valve connector to the battery positive terminal. A clicking sound should be heard. Connect the No. 2 terminal to the battery positive terminal. A clicking sound should be heard. Replace the lock-up control solenoid valve assembly if no clicking sound is heard.

Replacement

1. Remove the mounting bolts and lock-up control solenoid valve assembly.

   NOTE: Be sure to remove or replace the lock-up control solenoid valve A and B as an assembly.

2. Check the lock-up control solenoid valve oil passages for dust or dirt, and replace as an assembly, if necessary.

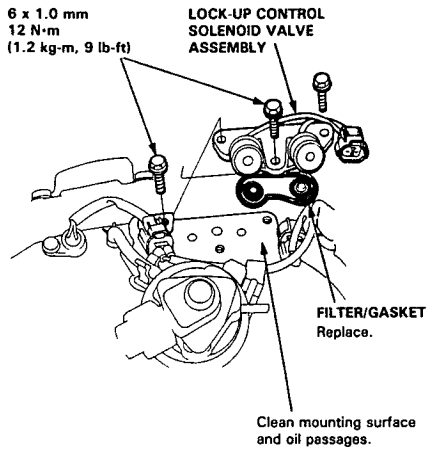

3. Clean the mounting surface and oil passages of the lock-up control solenoid valve assembly and install a new filter/gasket.

4. Check connector for rust, dirt or oil and reconnect it securely.

Shift Control Solenoid Valve

Test

NOTE: Shift control solenoid valves A and B must be removed/replaced as an assembly.

1. Disconnect the transmission sub-harness connector.

2. Measure the resistance between the No. 3 terminal of the transmission sub-harness and body ground and between the No. 4 terminal and body ground.

   STANDARD: 12–24 Ω

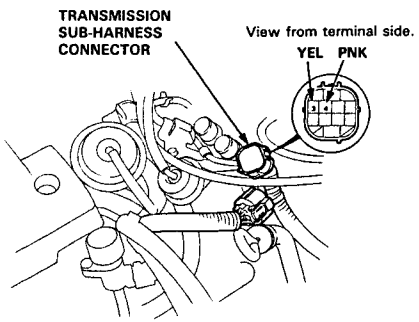

3. If the resistance is out of specification, disconnect the transmission sub-harness from the shift control solenoid valve harness.

4. Measure the resistance between the A terminal of the shift control solenoid valve harness and body ground and between the B terminal and body ground.

   STANDARD: 12–24 Ω

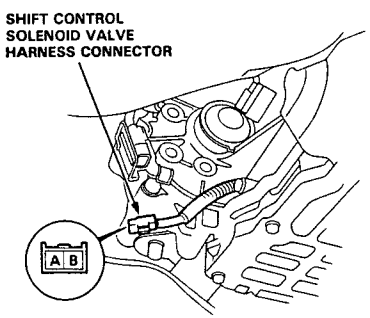

View from terminal side.

5. Replace the transmission sub-harness if the resistance is within specification.

6. Replace the shift control solenoid valve assembly if the resistance is out of specification.

7. If the resistance is within the standard, connect the A terminal of the shift control solenoid valve connector to the battery positive terminal. A clicking sound should be heard. Connect the B terminal to the battery positive terminal. A clicking sound should be heard. Replace the shift control solenoid valve assembly if no clicking sound is heard.

   NOTE: If the solenoid valve replacement is required, see Shift Control Solenoid Valve Replacement on page 14-100.

Linear Solenoid

Test

1. Disconnect the transmission sub-harness connector.

2. Measure the resistance between the No. 7 and No. 8 terminals of the transmission sub-harness.

   STANDARD: 5.0–5.6 Ω (at 70°F, 20°C)

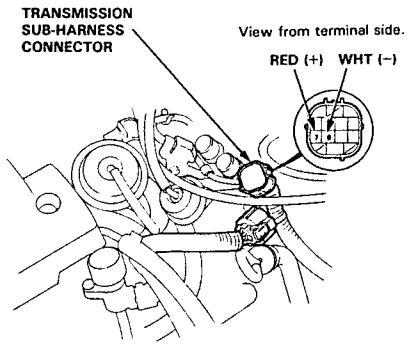

3. If the resistance is out of specification, disconnect the transmission sub-harness from the linear solenoid harness.

4. Measure the resistance between the A and B terminals of the linear solenoid harness.

   STANDARD: 5.0–5.6 Ω (at 70°F, 20°C)

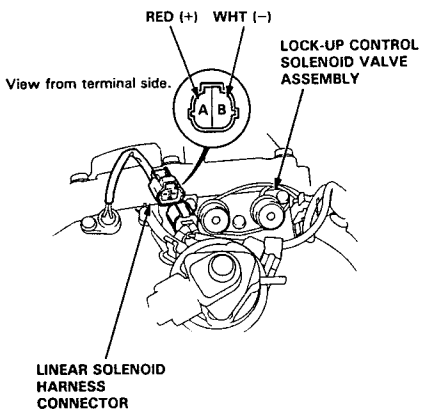

5. Replace the transmission sub-harness if the resistance is within specification.

6. Replace the linear solenoid if the resistance is out of specification.

7. If the resistance is within the standard, connect the A terminal of the linear solenoid connector to the battery positive terminal and connect the B terminal to the battery negative terminal. A clicking sound should be heard. If no clicking sound is heard, replace the linear solenoid and throttle valve body as an assembly.

   NOTE: If the linear solenoid replacement is required, see Throttle Valve Body/Linear Solenoid Replacement on page 14-133.

A/T Gear Position Switch

Replacement

⚠WARNING Make sure lifts, jacks and safety stands are placed properly (see section 1).

1. Raise the car.
2. Shift the select lever to [N] position.
3. Remove the transmission under-guard.

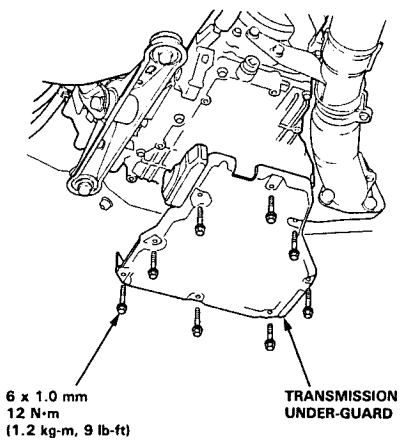

4. Disconnect the A/T gear position switch connector then remove the harness stay.

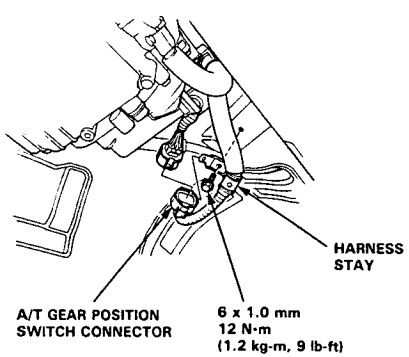

5. Remove the 6 mm bolt from the rear cover. Remove the 2 bolts then remove the A/T gear position switch from the control shaft.

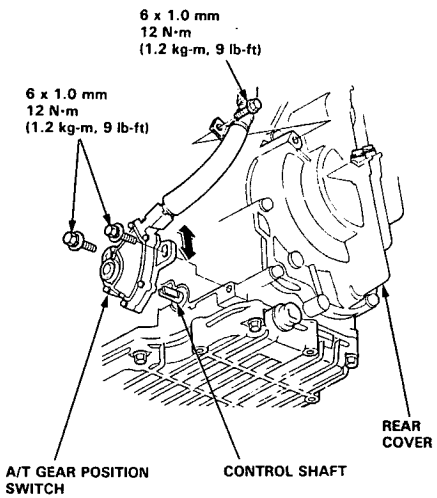

6. Set the A/T gear position switch to [N] position as shown.

   NOTE: The A/T gear position switch clicks in [N] position.

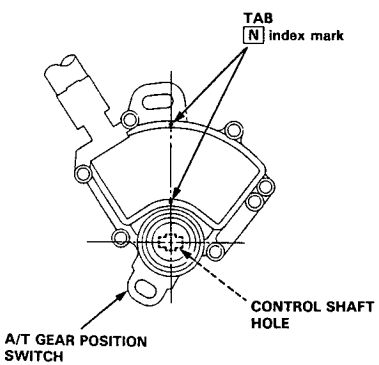

7. Install the A/T gear position switch in the reverse order of removal.

   NOTE:
   - Verify the control shaft is in the [N] position.
   - Put the A/T gear position switch in the control shaft.

8. Check the A/T gear position switch and the A/T gear position indicator (see section 23).
9. Move the select lever through all gears, and verify that the A/T gear position indicator follows the A/T gear position switch.

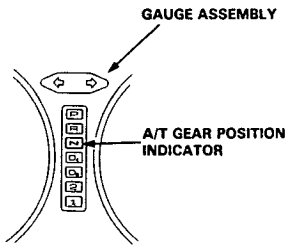

10. Start the engine and check the shift lever through all gears.

Hydraulic System

Symptom-to-Component Chart

SYMPTOM	Check these items on the PROBABLE CAUSE LIST	Check these items on the NOTES CHART
Engine runs, but car does not move in any gear.	1, 6, 7, 16, 42, 43	K, L, R, S
Car moves in [2] position but not in [D4] or [D3] position.	1, 8, 29, 44, 48	C, M, O
Car moves in [D4], [D3], [1] and [R] positions but not in [2] position.	1, 9, 30, 48, 49	C, L
Car moves in [D4], [D3], [2] and [1] positions but not in [R] position.	1, 22, 39, 40	C, L, Q
Car moves in [N] position.	1, 8, 9, 10, 11, 46, 47	C, D
Excessive idle vibration.	5, 6, 17, 36	B, K, L
Slips in all gears.	6, 7, 16	C, L, U
No engine braking in [1] position.	8, 12	C, D, L
No engine braking in [2] position.	9, 48	C, D, L
Slips in 1st gear.	8, 29, 44, 48	C, N, O, U
Slips in 2nd gear.	9, 20, 23, 30, 48, 49	C, L, U
Slips in 3rd gear.	10, 21, 23, 31, 44	C, L, U
Slips in 4th gear.	11, 23, 32	C, L, U
Slips in reverse gear.	34, 39, 40	C
Flares on 1–2 upshift.	2, 3, 15, 19, 30, 48	E, L, V
Flares on 2–3 upshift.	2, 3, 15, 20, 31, 44, 48	E, L, V
Flares on 3–4 upshift.	2, 3, 15, 21, 25, 32, 44	E, L, V
No upshift, transmission stays in 1st gear.	14, 19, 23	G, L
No downshift to 1st gear.	12, 19	G, L
Late upshift.	14	L, V
Erratic shifting.	14, 26	V
Harsh shift (up and down shifting).	2, 3, 4, 15, 23, 24, 25, 47	A, E, H, I, L, V
Harsh shift (1–2).	2, 9	C, D, V
Harsh shift (2–3).	2, 10, 23, 24	C, D, H, L, V
Harsh shift (3–4).	2, 11, 23, 25	C, D, I, L, V
Harsh kick-down shifts.	2, 3, 23, 26, 27	L, V, Q
Harsh kick-down shift (2–1).	8, 23, 48	O
Harsh downshift at closed throttle.	15	E, T
Harsh shift when manually shifting to [1] position.	33	L
Axle(s) slips out of transmission on turns.	43, 50	L, P, Q
Axle(s) stuck in transmission.	43	L, Q
Ratcheting noise when shifting into [R] position.	6, 7, 39, 40	K, L, Q
Loud popping noise when taking off in [R] position.	39, 40	L, Q
Ratcheting noise when shifting from [R] to [P] position or from [R] to [N] position.	38, 39, 40, 45	L, Q
Noise from transmission in all selector lever positions.	6, 17	K, L, Q
Noise from transmission only when wheels are rolling.	39, 42	L, Q
Gear whine, rpm related (pitch changes with shifts).	8, 41	K, L, Q
Gear whine, speed related (pitch changes with speed).	42	L, Q
Transmission will not shift into 4th gear in [D4] position.	1, 21, 25, 32	L
Lock-up clutch does not lock-up smoothly.	17, 36, 37	L
Lock-up clutch does not operate properly.	2, 3, 15, 18, 35, 36, 37	E, L, V
Transmission has multitude of problems shifting. At disassembly, large particles of metal are found on magnet.	42, 43	L, Q

	PROBABLE CAUSE
1.	Shift cable broken/out of adjustment.
2.	Throttle valve body/throttle valve misadjusted.
3.	Linear solenoid defective/damage.
4.	Wrong type ATF.
5.	Idle rpm too low/high.
6.	Oil pump worn or binding.
7.	Pressure regulator stuck.
8.	1st clutch defective.
9.	2nd clutch defective.
10.	3rd clutch defective.
11.	4th clutch defective.
12.	1st-hold clutch defective.
14.	Modulator valve stuck.
15.	Throttle valve stuck.
16.	ATF strainer clogged.
17.	Torque converter defective.
18.	Torque converter check valve stuck.
19.	1–2 shift valve stuck.
20.	2–3 shift valve stuck.
21.	3–4 shift valve stuck.
22.	Servo control valve stuck.
23.	Clutch pressure control (CPC) valve stuck.
24.	2–3 orifice control valve stuck.
25.	3–4 orifice control valve stuck.
26.	3rd kick-down valve stuck.
27.	4th kick-down valve stuck.
28.	4th exhaust valve stuck.
29.	1st accumulator defective.
30.	2nd accumulator defective.
31.	3rd accumulator defective.
32.	4th accumulator defective.
33.	1st-hold clutch defective.
34.	Servo valve stuck.
35.	Lock-up timing valve stuck.
36.	Lock-up shift valve stuck.
37.	Lock-up control valve stuck.
38.	Shift fork bent.
39.	Reverse gears worn/damaged (3 gears).
40.	Reverse selector worn.
41.	3rd gears worn/damaged (2 gears).
42.	Secondary gears worn/damaged (2 gears).
43.	Extension shaft worn.
44.	Feedpipe O-ring broken.
45.	4th gears worn/damaged (2 gears).
46.	Gear clearance incorrect.
47.	Clutch clearance incorrect.
48.	One-way (sprag) clutch defective.
49.	Sealing rings/guide worn.
50.	Axle-inboard joint clip missing.

(cont'd)

Hydraulic System

Symptom-to-Component Chart (cont'd)

The following symptoms can be caused by improper repair or assembly.	Check these items on the PROBABLE CAUSE DUE TO IMPROPER REPAIR	Items on the NOTES CHART
Car creeps in [N] position.	R1, R2	
Car does not move in [D4] or [D3] position.	R4	
Transmission locks up in [R] position.	R3	
Excessive drag in transmission.	R6	K, R
Excessive vibration, rpm related.	R7	
Noise with wheels moving only.	R1	
Main seal pops out.	R8	S
Various shifting problems.	R9, R10	
Harsh upshifts.	R11	

PROBABLE CAUSE DUE TO IMPROPER REPAIR	
R1.	Improper clutch clearance.
R2.	Improper gear clearance.
R3.	Parking brake lever installed upside down.
R4.	One-way (sprag) clutch installed upside down.
R5.	Reverse selector hub installed upside down.
R6.	Oil pump binding.
R7.	Torque converter not fully seated in oil pump.
R8.	Main seal improperly installed.
R9.	Springs improperly installed.
R10.	Valves improperly installed.
R11.	Ball check valves not installed.
R12.	Shift fork bolt not installed.

NOTES	
A.	See flushing procedure, page 14-178 and 179
B.	Set idle rpm in gear to specified idle speed. If still no good, adjust motor mounts as outlined in engine section of service manual.
C.	If the large cluch piston O-ring is broken, inspect the piston groove for rough machining.
D.	If the clutch pack is seized or is excessively worn, inspect the other clutches for wear and check the orifice control valves and throttle valve for free movement.
E.	If the throttle valve is stuck inspect the clutches for wear.
G.	If the 1—2 shift valve is stuck closed, the transmission will not upshift. If stuck open the transmission has no 1st gear.
H.	If the 2—3 orifice control valve is stuck, inspect the 2nd and 3rd clutch packs for wear.
I.	If the 3—4 orifice control valve is stuck, inspect the 3rd and 4th clutch packs for wear.
J.	If the clutch pressure control valve is stuck closed, the transmission will not shift out of 1st gear.
K.	Improper alignment of oil pump body and torque converter housing may cause oil pump seizure. The symptoms are mostly an rpm-related ticking noise or a high pitched squeak.

NOTES	
L.	If the ATF strainer is clogged with particles of steel or aluminum, inspect the oil pump. If OK and no cause for the contamination is found, replace the torque converter.
M.	If the 1st clutch feedpipe guide in the rear cover is scored by the mainshaft, inspect the ball bearing for excessive movement in the transmission housing. If OK, replace the rear cover as it is dented. The O-ring under the guide is probably worn.
N.	Replace the mainshaft if the bushings for the 1st and 4th feedpipe are loose or damaged. If the 1st feedpipe is damaged or out of round, replace it. If the 4th feedpipe is damaged or out of round, replace the rear cover.
O.	A worn or damaged sprag clutch is mostly a result of shifting the transmission in [D3] or [D4] position while the wheels rotate in reverse, such as rocking the car in snow.
P.	Inspect the frame for collision damage.
Q.	Inspect for damage or wear: 1. Reverse selector gear teeth chamfers. 2. Engagement teeth chamfers of countershaft 4th and reverse gear. 3. Shift fork for scuff marks in center. 4. Splines of extension shaft and secondary driven gear for wear. 5. Differential pinion shaft for wear under pinion gears. 6. Bottom of 3rd clutch for swirl marks. Replace items 1, 2, 3, 4 and 5 if worn or damaged. If transmission makes clicking, grinding or whirring noise, also replace mainshaft 4th gear and reverse idler gear and countershaft 4th gear in addition to 1, 2, 3, 4 or 5. If extension shaft, secondary driven gear and/or differential pinion shaft are worn, overhaul extension shaft, secondary driven gear and/or differential assembly and replace ATF strainer and thoroughly clean transmission, flush torque converter, cooler and lines. If bottom of 3rd clutch is swirled and transmission makes gear noise, replace the countershaft and secondary driven gear shaft.
R.	Be very careful not to damage the torque converter housing when replacing the main ball bearing. You may also damage the oil pump when you torque down the oil pump body. This will result in oil pump seizure if not detected. Use proper tools.
S.	Install the main seal flush with the torque converter housing. If you push it into the torque converter housing until it bottoms out, it will block the oil return passage and result in damage.
T.	Harsh downshifts when coasting to a stop with zero throttle may be caused by the linear solenoid not working.
U.	Check if servo valve cover is installed with snap ring. If they are not installed, the check valve may have been pushed out by hydraulic pressure causing a leak (internal), affecting all forward gears.
V.	Adjusting the throttle valve body, throttle valve, and linear solenoid are essential for proper operation of the transmission. Not only does it affect the shift quality if misadjusted, but also the lock-up clutch operation.

Road Test

NOTE: Warm up the engine to normal operating temperature (the radiator fan comes on).

1. Apply parking brake and block the wheels. Start the engine, then move the selector lever to [D4] position while depressing the brake pedal. Depress the accelerator pedal, and release it suddenly. Engine should not stall.
2. Repeat same test in [D3] positon.
3. Shift the selector lever to [D4] position and check that the shift points occur at approximate speeds shown. Also check for abnormal noise and clutch slippage.

NOTE: Throttle position sensor voltage represents the throttle opening.

—1. Connect the Test Harness between the ECM and connector (see section 11).
—2. Set the digital multimeter to check voltage between D11 (+) terminal and D22 (−) terminal for the throttle position sensor.

CAUTION:
- **All SRS electrical wiring harnesses are covered with yellow outer insulation.**
- **Before disconnecting the SRS wire harness, install the short connector(s) on the airbag(s).**
- **Replace the entire affected SRS harness assembly if it has an open circuit or damaged wiring.**

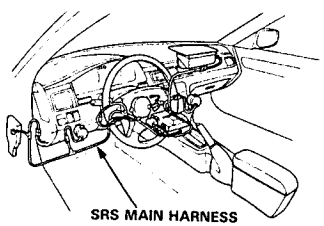

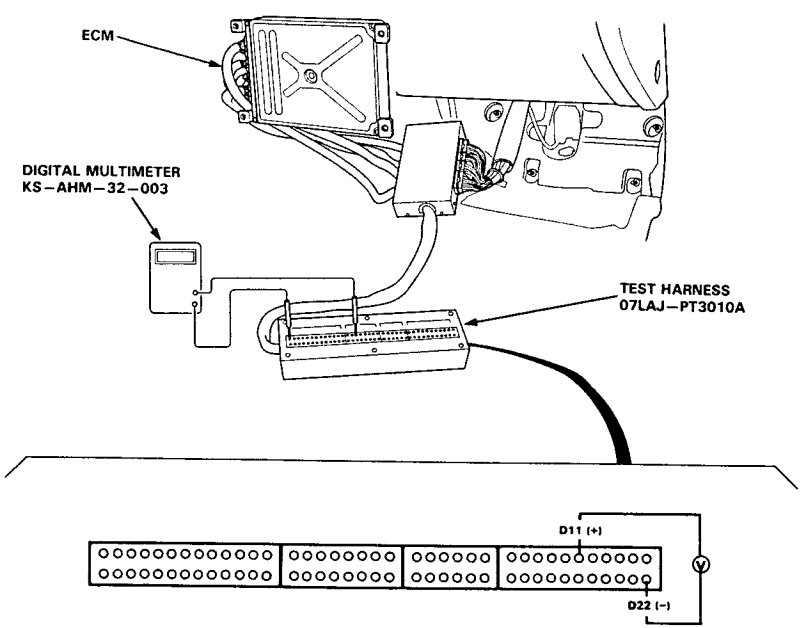

[D4] **Position**

- **Upshift**

	unit	1st → 2nd	2nd → 3rd	3rd → 4th	Lock-up Clutch ON
Throttle position sensor voltage: 0.753 V	mph	10-13	16.5—20	28—32.5	20.5—24.5
	km/h	16—21	27—32	45—52	33—39
Throttle position sensor voltage: 2.272 V	mph	18.5—22.5	30.5—36	44.5—50.5	65—73.5
	km/h	30—36	49—58	72—81	105—118
Full-opened throttle Throttle position sensor voltage: 4.55 V	mph	35.5—41	63—71.5	100.5—111.5	93—103.5
	km/h	57—66	101—115	162—179	150—167

- **Downshift**

	unit	Lock-up Clutch OFF	4th → 3rd	3rd → 2nd	2nd → 1st
Throttle position sensor voltage: 0.753 V	mph	17—20	18.5—22	6—9.5	6—9.5
	km/h	27—32	30—35	10—15	10—15
Throttle position sensor voltage: 2.272 V	mph	48—54	—	—	—
	km/h	77—87	—	—	—
Full-opened throttle Throttle position sensor voltage: 4.55 V	mph	80.5—91	87—97.5	53—60	26—31.5
	km/h	130—146	140—157	85—97	42—51

4. Accelerate to about 35 mph (57 km/h) so the transmssion is in 4th, then shift [D4] to [2] position. The car should immediately begin slowing down from engine braking.

   CAUTION: Do not shift from [D4] or [D3] position to [2] or [1] position at speeds over 62 mph (100 km/h); you may damage the transmission.

5. Check for abnormal noise and clutch slippage in the following positions.

   [1] (1st Gear) Position
   —1. Accelerate from a stop at full throttle. Check that there is no abnormal noise or clutch slippage.
   —2. Upshifts should not occur with the selector in this position.

   [2] (2nd Gear) Position
   —1. Accelerate from a stop at full throttle. Check that there is no abnormal noise or clutch slippage.
   —2. Upshifts and downshifts should not occur with the selector in this position.

   [R] (Reverse) Position
   Accelerate from a stop at full throttle, and check for abnormal noise and clutch slippage.

6. Test in [P] (Parking) Position
   Park car on slope (approx. 16°), apply the parking brake, and shift into [P] position. Release the brake; the car should not move.

Stall Speed

Test

CAUTION:
- **To prevent transmission damage, do not test stall speed for more than 10 seconds at a time.**
- **Do not shift the lever while raising the engine speed.**
- **Be sure to remove the pressure gauge before testing stall speed.**

1. Engage the parking brake and block all four wheels.
2. Connect the tachometer, and start the engine.
3. Make sure the A/C switch is OFF.
4. After the engine has warmed up to normal operating temperature (the radiator fan comes on), shift into [2] position.
5. Fully depress the brake pedal and accelerator for 6 to 8 seconds, and note engine speed.
6. Allow 2 minutes for cooling, then repeat the test in [1], [D4] and [R] positions.

NOTE:
- Stall speed tests should be used for diagnostic purposes only.
- Stall speed should be the same in [D4], [2], [1] and [R] positions.

Stall Speed RPM: 2,200—2,500 rpm

TROUBLE	PROBABLE CAUSE
Stall rpm high in [D4], [2], [1] and [R] positions	• Low fluid level or oil pump output • Clogged ATF strainer • Pressure regulator valve stuck closed • Slipping clutch
Stall rpm high in [1] position	• Slippage of 1st clutch, 1st-hold clutch or 1st gear one-way clutch
Stall rpm high in [2] position	• Slippage of 2nd clutch.
Stall rpm high in [D4] position	• Slippage of 1st clutch, 1st gear one-way clutch
Stall rpm high in [R] position	• Slippage of 4th clutch
Stall rpm low in [D4], [2], [1] and [R] positions	• Engine output low • Torque converter one-way clutch slipping

Fluid Level

Checking/Changing

Checking

NOTE: Check the fluid level with the engine at normal operating temperature (the radiator fan comes on).

1. Park the car on level ground. Shut off the engine.
2. Remove the dipstick (yellow loop) from the transmission and wipe it with a clean cloth.
3. Insert the dipstick into the transmission. Make sure the notch in the rubber cap fits in the dipstick guide and push the dipstick in all the way.

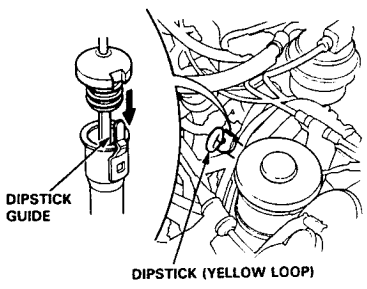

4. Remove the dipstick and check the fluid level. It should be between the upper and lower marks.

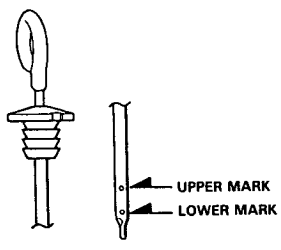

5. If the level is below the lower mark, add fluid into the tube to bring it to the upper mark. Use Honda Premium Formula Automatic Transmission Fluid or an equivalent DEXRON® II Automatic Transmission Fluid (ATF) only.
6. Insert the dipstick back in the transmission. Make sure the notch fits in the dipstick guide and the dipstick is down all the way.

Changing

1. Bring the transmission up to normal operating temperature (the radiator fan comes on) by driving the car. Park the car on level ground, turn the engine off, then remove drain plug.

   NOTE: If a cooler flusher is to be used, see page 14-178 and 179.

2. Reinstall the drain plug with a new washer, then refill the transmission to the upper mark on the dipstick.

   Automatic Transmission Fluid Capacity:
   2.5 ℓ (2.6 US qt., 2.2 Imp qt.) at change
   7.2 ℓ (7.6 US qt., 6.3 Imp qt.) at overhaul

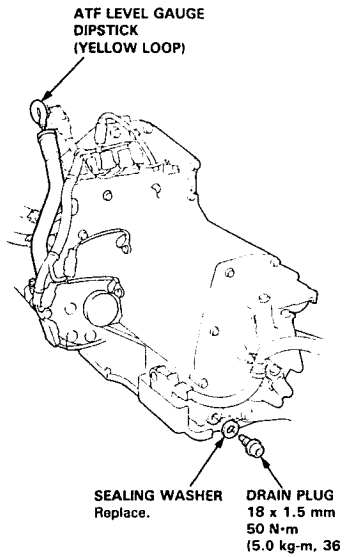

Pressure Testing

⚠WARNING
- **While testing, be careful of the rotating front wheels.**
- **Make sure lifts, jacks, and safety stands are placed properly (see section 1).**

CAUTION:
- **Before testing, be sure the transmission fluid is filled to the proper level.**
- **Warm up the engine before testing.**

1. Raise the car (see section 1).

2. Warm up the engine, then stop the engine and connect a tachometer.

3. Connect the oil pressure gauge to each inspection hole(s).

   TORQUE: 18 N·m (1.8 kg-m, 12 lb-ft)

   CAUTION: Connect the oil pressure gauge securely, be sure not to allow dust and other foreign particles to enter the inspection hole.

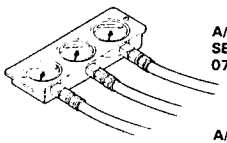

A/T OIL PRESSURE GAUGE SET W/PANEL 07406–0020400

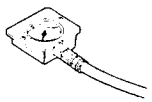

A/T LOW PRESSURE GAUGE W/PANEL 07406–0070300

A/T OIL PRESSURE HOSE, 2210 mm 07MAJ–PY4011A (4 Required)

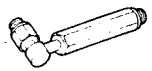

A/T OIL PRESSURE HOSE ADAPTER 07MAJ–PY40120 (4 Required)

NOTE: Use the A/T Oil Pressure Gauge Set (07406–0020003) or A/T Low Pressure Gauge (07406–0070000), and the oil pressure gauge hoses and adapters shown above.

4. Start the engine and measure the respective pressure as follows.
   - Line Pressure
   - Clutch Pressure
   - Clutch Low/High Pressure
   - Throttle B Pressure
   - Modulator Pressure

5. Install a new washer and the sealing bolt in the inspection hole and tighten to the secified torque.

   TORQUE: 18 N·m (1.8 kg-m, 12 lb-ft)

   NOTE: Do not reuse old aluminum washers.

- **Line Pressure Measurement**

–1. Set the parking brake and block both rear wheels securely.

–2. Run the engine at 2,000 rpm.

–3. Shift the select lever to [N] or [P] position.

   NOTE: Higher pressures may be indicated if measurements are made in selector positions other than [N] or [P] position.

–4. Measure line pressure.

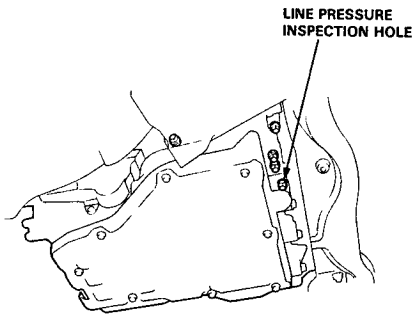

PRESSURE	SELECTOR POSITION	SYMPTOM	PROBABLE CAUSE	FLUID PRESSURE	
				Standard	Service Limit
Line	[N] or [P]	No (or low) line pressure	Torque converter, oil pump pressure regulator, torque converter check valve, oil pump.	850–900 kPa (8.5–9.0 kg/cm², 121–128 psi)	800 kPa (8.0 kg/cm², 114 psi)

NOTE: Higher pressures may be indicated if measurements are made in selector positions other than [N] or [P] position.

- **Clutch Pressure Measurement**

⚠WARNING **While testing, be careful of the rotating front wheels.**

–1. Set the parking brake and block both rear wheels securely.
–2. Raise the front of the car and support with safety stands.
–3. Allow the front wheels to rotate freely.
–4. Run the engine at 2,000 rpm.
–5. Measure each clutch pressure.

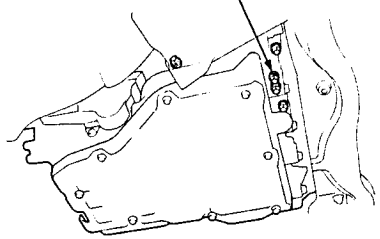

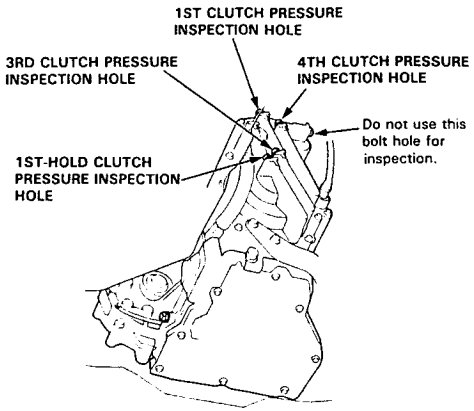

PRESSURE	SELECTOR POSITION	SYMPTOM	PROBABLE CAUSE	FLUID PRESSURE	
				Standard	Service Limit
1st Clutch	[1] or [D4]	No or low 1st pressure	1st Clutch	850–900 kPa (8.5–9.0 kg/cm², 121–128 psi)	800 kPa (8.0 kg/cm², 114 psi)
1st-hold Clutch	[1]	No or low 1st-hold pressure	1st-hold Clutch		
2nd Clutch	[2]	No or low 2nd pressure	2nd Clutch		
2nd Clutch	[D4]	No or low 2nd pressure	2nd Clutch	500 kPa (5.0 kg/cm², 71 psi) (throttle fully closed) 900 kPa (9.0 kg/cm², 128 psi) (throttle more than 1/4 opened)	450 kPa (4.5 kg/cm², 64 psi) (throttle fully closed) 800 kPa (8.0 kg/cm², 114 psi) (throttle more than 1/4 opened)
3rd Clutch		No or low 3rd pressure	3rd Clutch		
4th Clutch		No or low 4th pressure	4th Clutch		
	[R]		Servo Valve or 4th Clutch	850–900 kPa (8.5–9.0 kg/cm², 121–128 psi)	800 kPa (8.0 kg/cm², 114 psi)

(cont'd)

Pressure Testing

(cont'd)

- **Clutch Low/High Pressure Measurement**

⚠WARNING While testing, be careful of the rotating front wheels.

–1. Allow the front wheels to rotate freely.

–2. Start the engine and let it idle.

–3. Shift the select lever to [D4] position.

–4. Slowly press down the accelerator pedal to increase engine rpm until pressure is indicated on the oil pressure gauge. Then release the accelerator pedal, allowing the engine return to an idle, and measure the pressure reading.

–5. With the engine idling, press down the accelerator pedal approximately 1/2 of its possible travel and increase the engine rpm until pressure is indicated on the gauge, then measure the highest pressure reading obtained.

–6. Repeat Steps –4. and –5. for each clutch pressure being inspected.

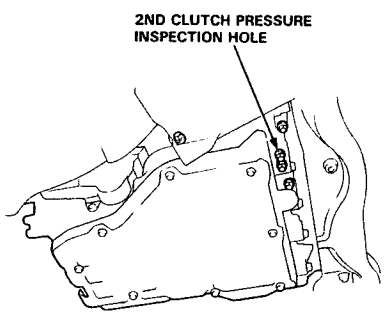

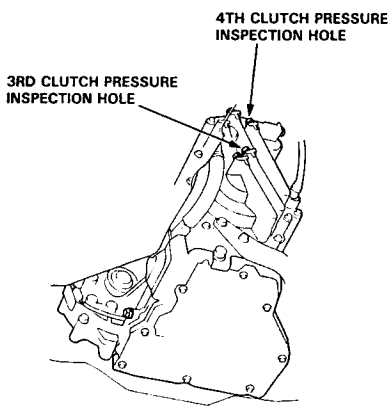

PRESSURE	SELECTOR POSITION	SYMPTOM	PROBABLE CAUSE	FLUID PRESSURE	
				Standard	Service Limit
2nd Clutch	[D4]	No or low 2nd pressure	2nd Clutch	500–900 kPa (5.0–9.0 kg/cm², 71–128 psi) varies with throttle opening	450 kPa (4.5 kg/cm², 64 psi) with accelerator pedal released 800 kPa (8.0 kg/cm², 114 psi) with accelerator pedal more than 1/4 opened
3rd Clutch		No or low 3rd pressure	3rd Clutch		
4th Clutch		No or low 4th pressure	4th Clutch		

- **Throttle B Pressure Measurement**

⚠WARNING While testing, be careful of the rotating front wheels.

–1. Allow the front wheels to rotate freely.

–2. Disconnect the transmission sub-harness connector.

–3. Shift the select lever to [D4] position.

–4. Run the engine at 1,000 rpm.

–5. Measure full open throttle B pressure.

–6. Connect battery voltage to the linear solenoid terminals of the transmission sub-harness connector.

–7. Measure full closed throttle B pressure.

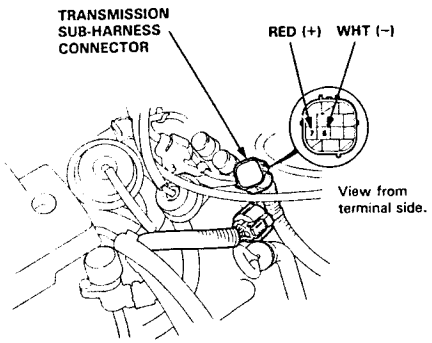

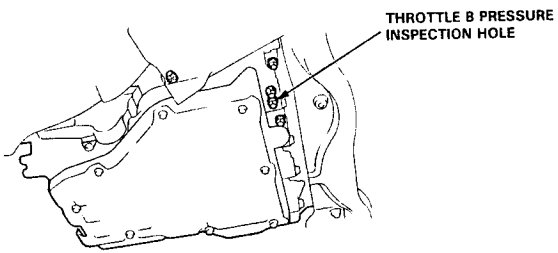

PRESSURE	SELECTOR POSITION	SYMPTOM	PROBABLE CAUSE	FLUID PRESSURE	
				Standard	Service Limit
Throttle B	[D4]	Pressure too high	Throttle Valve Body Assembly	0 kPa (0 kg/cm², 0 psi) throttle full closed	—
		No or low pressure		500–530 kPa (5.0–5.3 kg/cm², 71–75 psi) throttle full opened	470 kPa (4.7 kg/cm², 67 psi) throttle full opened

(cont'd)

Pressure Testing

(cont'd)

- **Modulator Pressure Measurement**

—1. Set the parking brake and block both rear wheels securely.

—2. Run the engine at 2,000 rpm.

—3. Shift the select lever to [N] or [P] position.

—4. Measure modulator pressure.

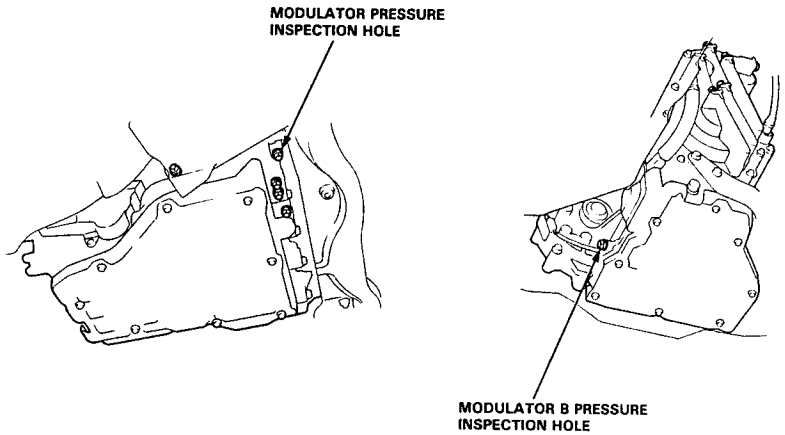

PRESSURE	SELECTOR POSITION	SYMPTOM	PROBABLE CAUSE	FLUID PRESSURE	
				Standard	Service Limit
Modulator	[N] or [P]	No or low modulator pressure	Modulator Valve	460–510 kPa (4.6–5.1 kg/cm², 65–73 psi)	410 kPa (4.1 kg/cm², 58 psi)
		No or low modulator pressure	Shift Control Solenoid Valve Assembly		

Lower Valve Body Assembly

Removal/Installation

WARNING **Make sure lifts, jacks and safety stands are placed properly (see section 1).**

1. Raise the car (see section 1).
2. Remove the transmission under-guard.
3. Remove the drain plug and drain the automatic transmission fluid (ATF). Reinstall the drain plug with a new sealing washer.

   TORQUE: 50 N·m (5.0 kg-m, 36 lb-ft)

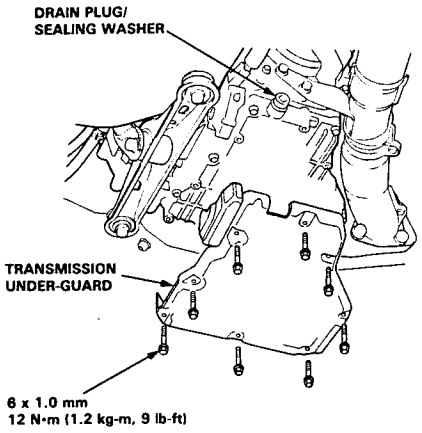

4. Remove the transmission mount and mount bracket.

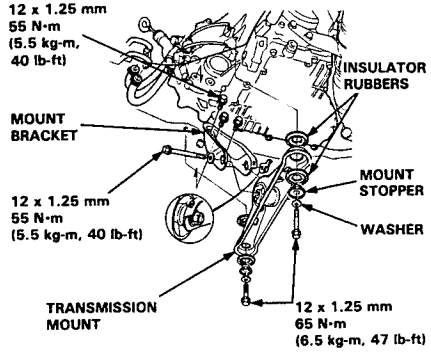

5. Disconnect the shift control solenoid valve connector from the transmission sub-harness.
6. Remove the lower valve body assembly from the transmission housing following the numbered sequence.

   NOTE: Shift the control shaft to [P] position and push the shift fork shaft to the drive position as shown.

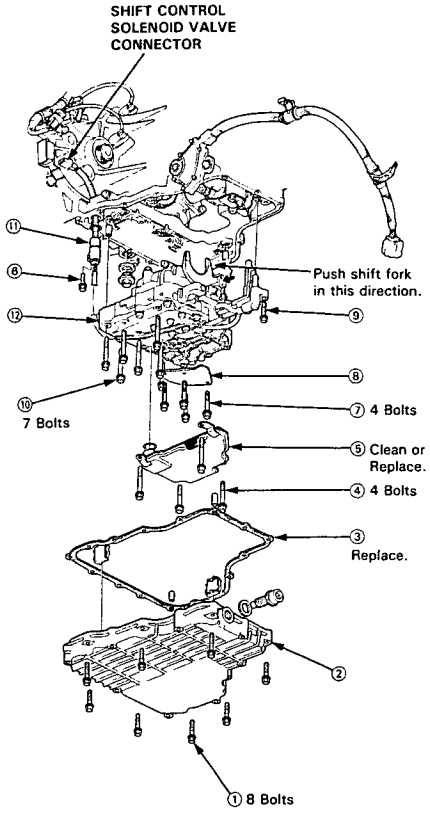

(cont'd)

Lower Valve Body Assembly

Removal/Installation (cont'd)

7. Install the lower valve body assembly in the reverse order of removal.

   —1. Assemble the lower valve body assembly (see page 14-99).

   —2. Install the lower valve body assembly with the thirteen bolts as shown.

   TORQUE: 12 N·m (1.2 kg-m, 9 lb-ft)

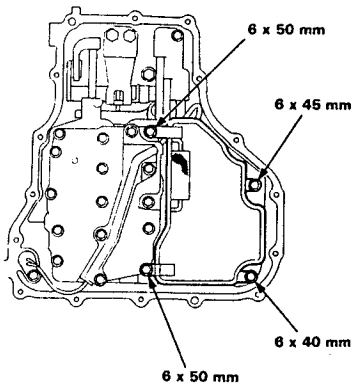

   —3. Install the ATF strainer on the lower valve body assembly with the four bolts as shown.

   TORQUE: 12 N·m (1.2 kg-m, 9 lb-ft)

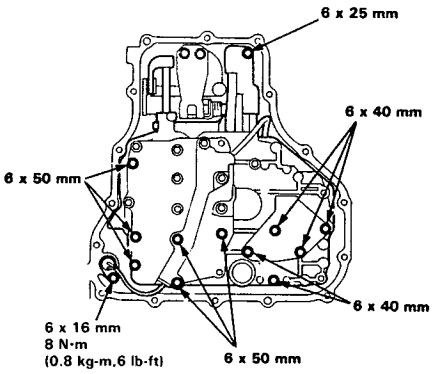

   —4. Install the oil pan with eight bolts as shown.

   TORQUE: 12 N·m (1.2 kg-m, 9 lb-ft)

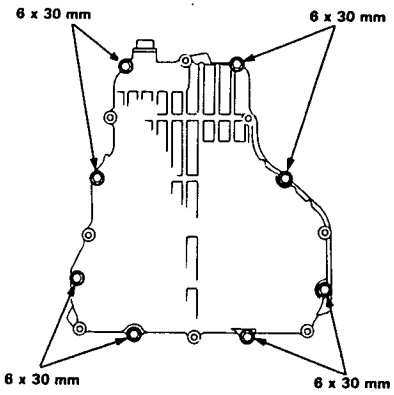

Disassembly/Reassembly

NOTE:
- Clean all parts thoroughly in solvent or carburetor cleaner and dry with compressed air.
- Blow out all passages.
- Coat all parts with ATF before reassembly.
- Replace the filters.
- Install the filters in the direction shown.

CAUTION: Do not use a magnet to remove the check balls; it may magnetize the balls.

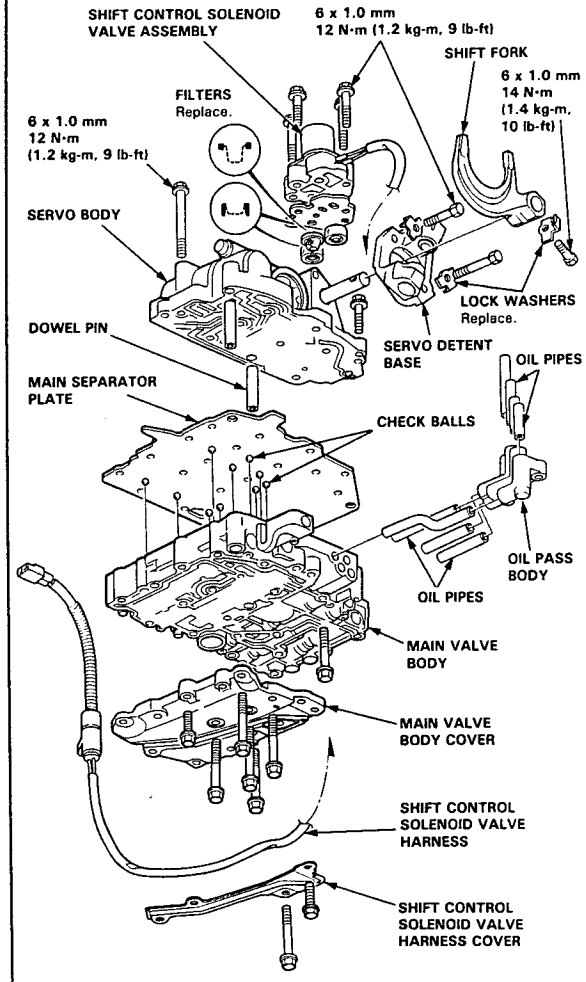

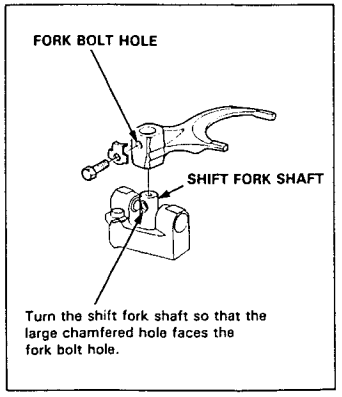

6 mm BOLT LENGTH

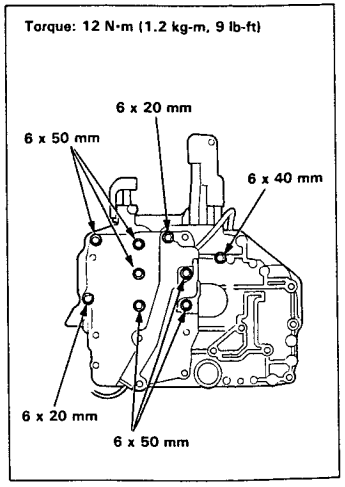

Shift Control Solenoid Valve

Replacement

NOTE: Shift control solenoid valve A and B must be replaced as an assembly

1. Remove the lower valve body assembly.
2. Remove the harness cover.
3. Remove the shift control solenoid valve assembly from the servo body.
4. Check the shift control solenoid valve oil passages for dust or dirt, and replace as an assembly, if necessary.
5. Clean the mounting surface and oil passages.

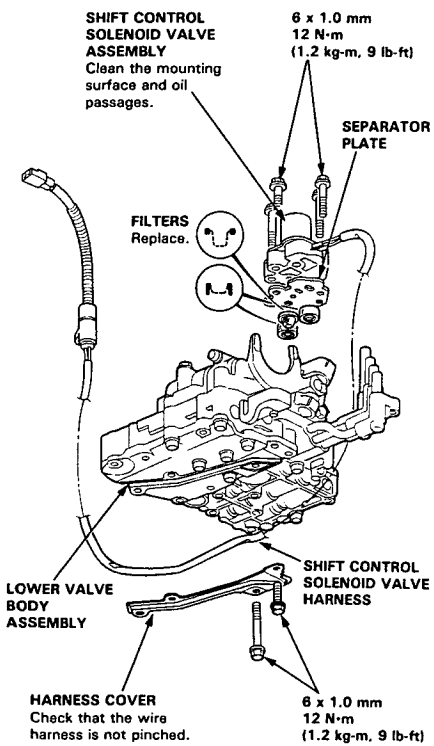

Transmission

Removal

WARNING **Make sure lifts are placed properly, and hoist brackets are attached to the correct position on the engine (see section 1).**

CAUTION: Use fender covers to avoid damaging painted surfaces.

NOTE: The radio may have a coded theft protection circuit. Be sure to get the customer's code number before
- Disconnecting the battery.
- Removing the No. 39 (10 A) fuse in the under-hood fuse/relay box.
- Removing the radio.

After service, reconnect power to the radio and turn it on. When the word "CODE" is displayed, enter the customer's 5-digit code to restore radio operation.

1. Disconnect the battery negative (−) and positive (+) cables from the battery.
2. Remove the battery set plate.
3. Remove the battery with the battery box.
4. Remove the under-hood ABS fuse/relay box.
5. Remove the sub-ground cable.
6. Remove the heat shield.

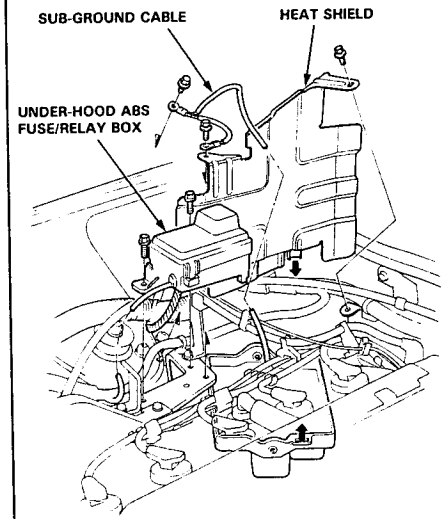

7. Remove the distributor.
8. Disconnect the connector from the control box, then remove the control box.

   CAUTION: Do not disconnect the vacuum tubes from the control box.

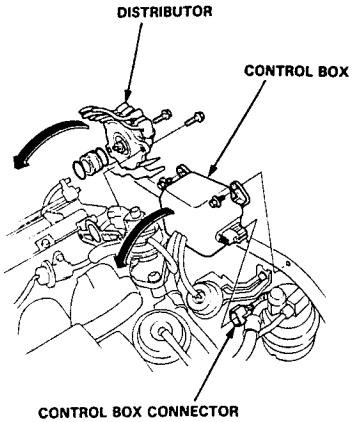

9. Remove the torque converter cover.
10. Remove the eight drive plate bolts one at a time while rotating the crankshaft pulley.

    NOTE: If necessary, remove the spark plugs while removing the drive plate bolts.

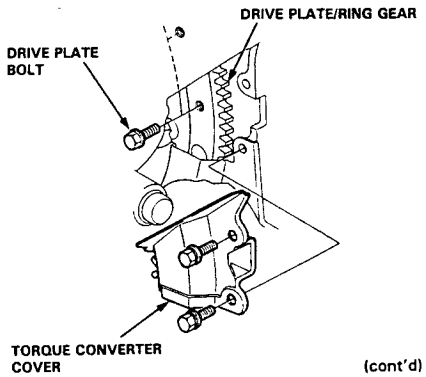

(cont'd)

Transmission

Removal (cont'd)

11. Disconnect the transmission sub-harness connector.

12. Remove the transmission ground cable.

13. Remove the transmission housing mounting bolts and the 26 mm shim.

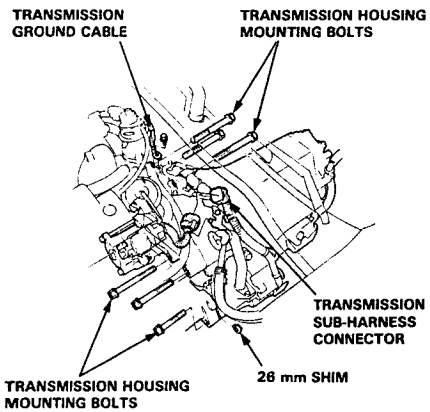

14. Remove the transmission under-guard.

15. Remove the drain plug and drain the automatic transmission fluid (ATF). Reinstall the drain plug with a new sealing washer.

TORQUE: 50 N·m (5.0 kg-m, 36 lb-ft)

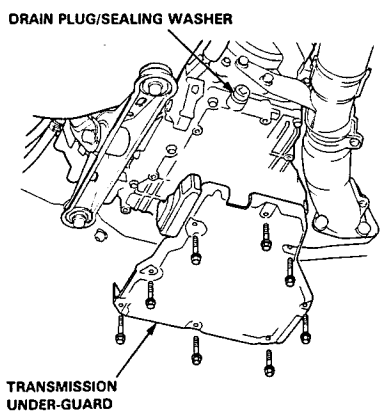

16. Remove the transmission mount and mount bracket.

17. Remove the ATF cooler hoses at the joint pipes. Turn the ends of the cooler hoses up to prevent ATF from flowing out, then plug the joint pipes.

NOTE: Check for any signs of leakage at the hose joints.

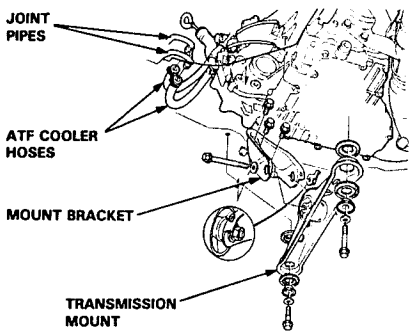

18. Shift to [P] position by rotating the control shaft.

19. Remove the secondary cover and 33 mm sealing bolt.

20. Remove the extension shaft from the differential using the special tool as shown.

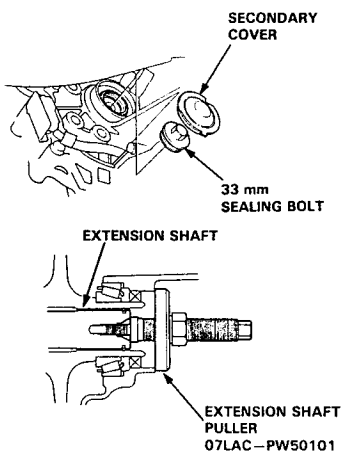

21. Remove the two bolts from exhaust pipe A stay.

22. Remove exhaust pipe A.

23. Remove the exhaust manifold stay.

24. Remove the shift cable cover.

25. Remove the control lever from the control shaft.

26. Remove the shift cable holder from the transmission housing.

CAUTION: Take care not to bend the shift cable.

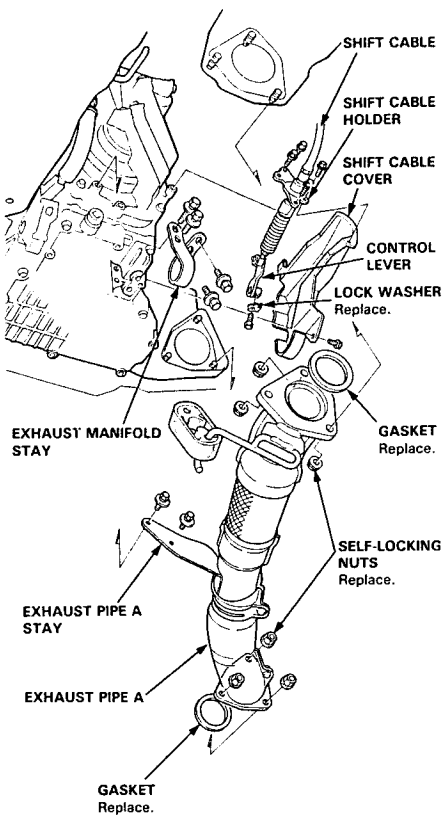

27. Disconnect the A/T gear position switch connector then remove the harness stay.

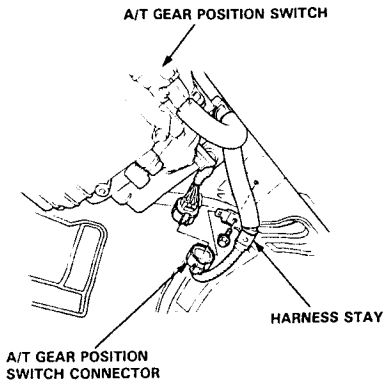

28. Remove the transmission mid mount nuts.

29. Place a jack under the transmission and raise the transmission just enough to take weight off of the mounts, then remove the mid mounts and mid mount spacer.

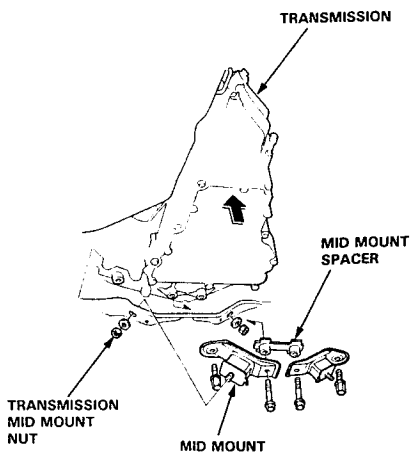

(cont'd)

Removal (cont'd)

30. Remove the transmission housing mounting bolts.

31. Remove the torque converter cover mounting bolt on the torque converter housing side.

    NOTE: Do not remove the torque converter cover mounting bolt on the differential carrier side, or the torque converter cover.

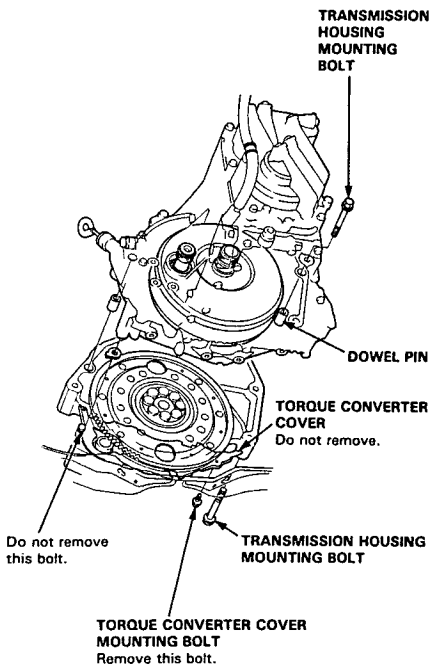

32. Pull the transmission away from the engine until it clears the dowel pin, then lower it on the transmission jack.

Illustrated Index

Housing/Lower Valve Body

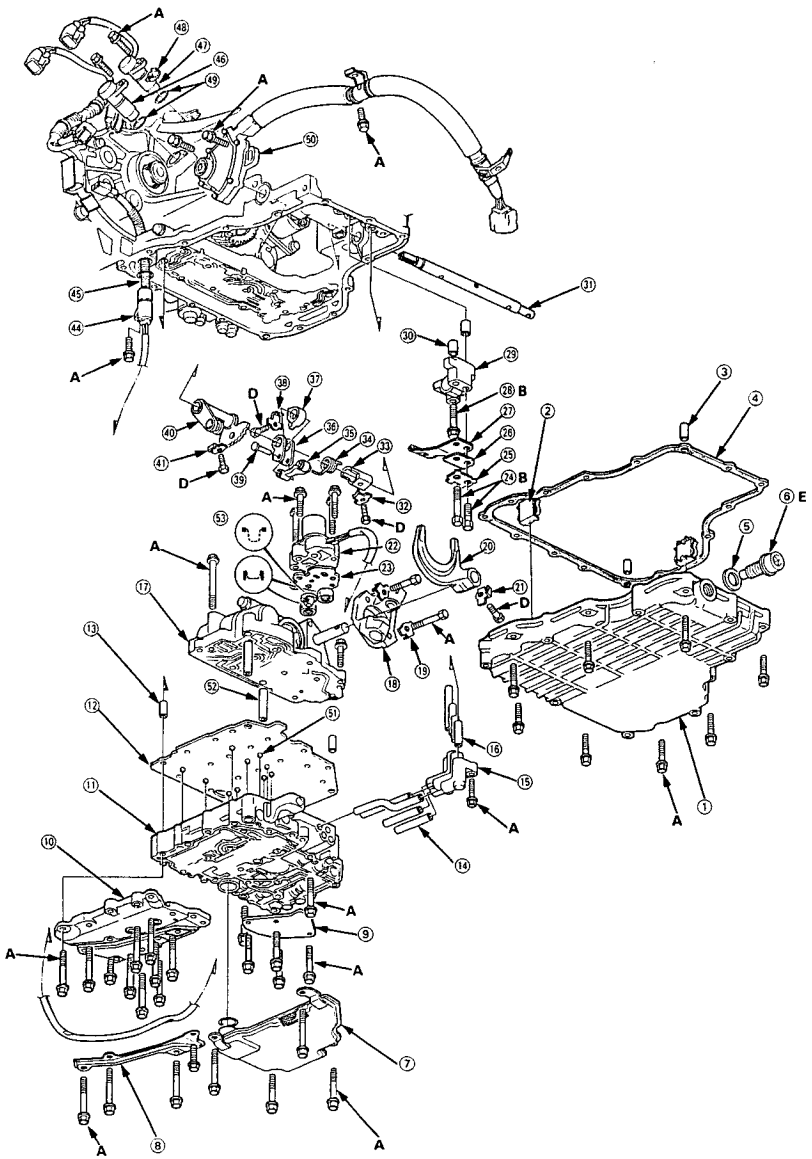

① TRANSMISSION OIL PAN
② ATF MAGNET Clean.
③ DOWEL PIN
④ OIL PAN GASKET Replace.
⑤ SEALING WASHER Replace.
⑥ DRAIN PLUG
⑦ ATF STRAINER Clean.
⑧ HARNESS COVER
⑨ MAIN VALVE BODY PLATE
⑩ MAIN VALVE BODY COVER
⑪ MAIN VALVE BODY
⑫ MAIN SEPARATOR PLATE
⑬ DOWEL PIN
⑭ OIL PIPES
⑮ OIL PASS BODY
⑯ OIL PIPES
⑰ SERVO BODY
⑱ SERVO DETENT BASE
⑲ LOCK WASHER Replace.
⑳ SHIFT FORK
㉑ LOCK WASHER Replace.
㉒ SHIFT CONTROL SOLENOID VALVE ASSEMBLY
㉓ SHIFT CONTROL SOLENOID VALVE SEPARATOR PLATE
㉔ SPECIAL BOLTS
㉕ LOCK WASHER Replace.
㉖ DETENT SPRING PLATE
㉗ DETENT SPRING
㉘ SPECIAL BOLT
㉙ PARKING BRAKE ROLLER GUIDE
㉚ DOWEL PIN
㉛ CONTROL SHAFT
㉜ LOCK WASHER Replace.
㉝ CONTROL SHAFT COLLAR
㉞ PARKING BRAKE SHIFT ARM SPRING
㉟ PARKING BRAKE ROLLER ROD
㊱ PARKING BRAKE SHIFT ARM
㊲ PARKING BRAKE STOPPER
㊳ LOCK WASHER Replace.
㊴ SHIFT ARM ROLLER
㊵ DETENT LEVER
㊶ LOCK WASHER Replace.
㊹ SHIFT CONTROL SOLENOID VALVE HARNESS/CONNECTOR
㊺ O-RING Replace.
㊻ COUNTERSHAFT SPEED SENSOR
㊼ MAINSHAFT SPEED SENSOR
㊽ MAINSHAFT SPEED SENSOR WASHER
㊾ O-RINGS Replace.
㊿ A/T GEAR POSITION SWITCH
(51) CHECK BALLS
(52) OIL PIPES
(53) FILTERS

TORQUE SPECIFICATIONS

No.	Torque Value	Bolt Size	Remarks
A	12 N·m (1.2 kg-m, 9 lb-ft)	6 x 1.0 mm	
B	30 N·m (3.0 kg-m, 22 lb-ft)	8 x 1.25 mm	
D	14 N·m (1.4 kg-m, 10 lb-ft)	6 x 1.0 mm	
E	50 N·m (5.0 kg-m, 36 lb-ft)	18 x 1.5 mm	Drain Plug

Illustrated Index

Rear Cover

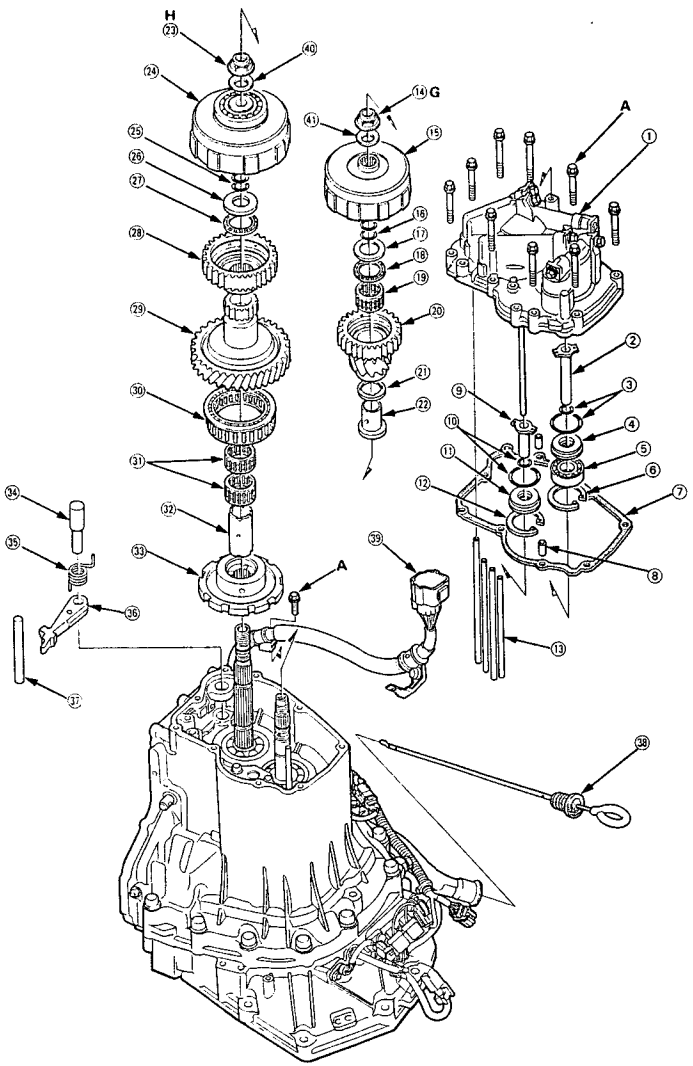

① REAR COVER
② 1ST CLUTCH FEED PIPE
③ O-RINGS Replace.
④ FEED PIPE GUIDE
⑤ BALL BEARING
⑥ SNAP RING, 38 mm
⑦ REAR COVER GASKET Replace.
⑧ DOWEL PIN
⑨ 1ST-HOLD CLUTCH FEED PIPE
⑩ O-RINGS Replace.
⑪ FEED PIPE GUIDE
⑫ SNAP RING, 38 mm
⑬ OIL PIPES
⑭ MAINSHAFT LOCKNUT, 24 x 1.25 mm (Flange nut) Replace.
⑮ 1ST CLUTCH ASSEMBLY
⑯ O-RINGS Replace.
⑰ THRUST WASHER
⑱ THRUST NEEDLE BEARING
⑲ NEEDLE BEARING
⑳ MAINSHAFT 1ST GEAR
㉑ THRUST WASHER
㉒ MAINSHAFT 1ST GEAR COLLAR
㉓ COUNTERSHAFT LOCKNUT, 24 x 1.25 mm (Flange nut) Replace.
㉔ 1ST-HOLD CLUTCH ASSEMBLY
㉕ O-RINGS Replace.
㉖ THRUST WASHER
㉗ THRUST NEEDLE BEARING
㉘ 1ST HOLD CLUTCH HUB
㉙ COUNTERSHAFT 1ST GEAR
㉚ ONE-WAY CLUTCH
㉛ NEEDLE BEARINGS
㉜ COUNTERSHAFT 1ST GEAR COLLAR
㉝ PARKING GEAR
㉞ PARKING BRAKE PAWL SHAFT
㉟ PARKING BRAKE PAWL SPRING
㊱ PARKING BRAKE PAWL
㊲ PARKING BRAKE PAWL STOPPER
㊳ ATF LEVEL GAUGE DIPSTICK
㊴ TRANSMISSION SUB-HARNESS
㊵ COUNTERSHAFT DISC SPRING Replace.
㊶ MAINSHAFT DISC SPRING Replace.

TORQUE SPECIFICATIONS

No.	Torque Value	Bolt Size	Remarks
A	12 N·m (1.2 kg-m, 9 lb-ft)	6 x 1.0 mm	
G	140 N·m (14.0 kg-m, 101 lb-ft)	24 x 1.25 mm	Mainshaft Locknut: Left-hand threads
H	140 N·m (14.0 kg-m, 101 lb-ft)	24 x 1.25 mm	Countershaft Locknut

Illustrated Index

Transmission Housing

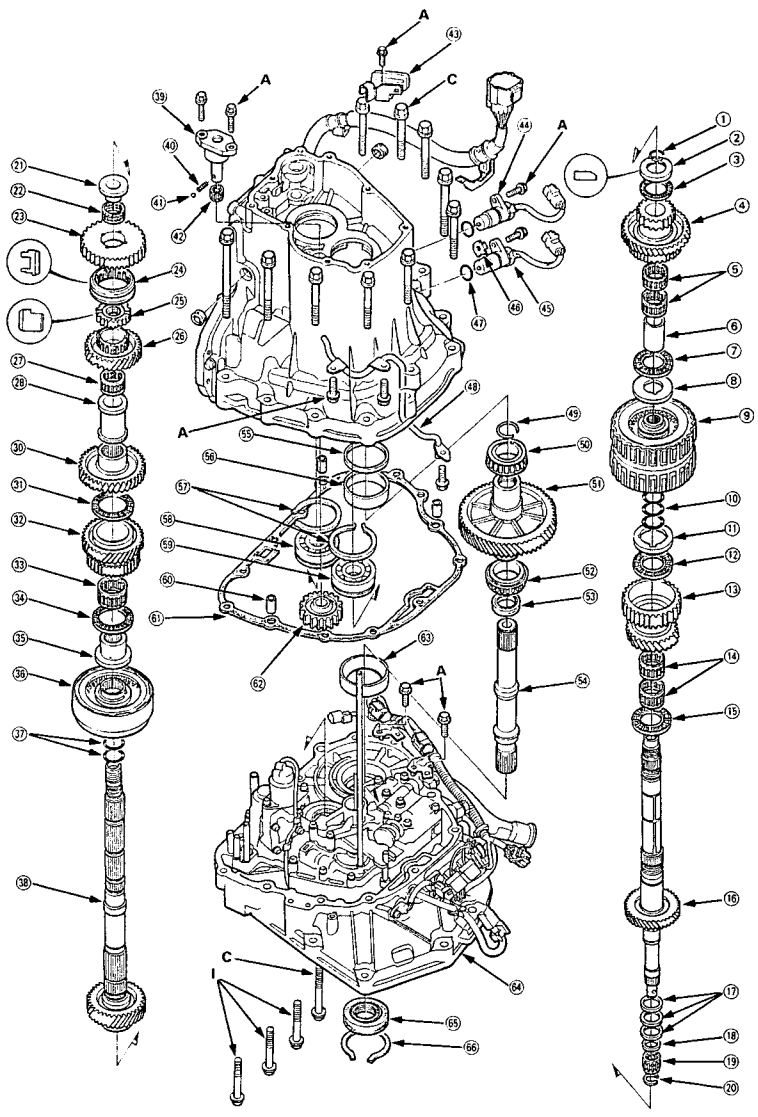

① SNAP RING, 28 mm
② THRUST WASHER
③ THRUST NEEDLE BEARING
④ MAINSHAFT 4TH/REVERSE GEAR
⑤ NEEDLE BEARINGS
⑥ MAINSHAFT 4TH GEAR COLLAR
⑦ THRUST NEEDLE BEARING
⑧ THRUST WASHER
⑨ 4TH/2ND CLUTCH ASSEMBLY
⑩ O-RINGS Replace.
⑪ 2ND GEAR THRUST WASHER, 37.5 x 56 mm Selective part
⑫ THRUST NEEDLE BEARING
⑬ MAINSHAFT 2ND GEAR
⑭ NEEDLE BEARINGS
⑮ THRUST NEEDLE BEARING
⑯ MAINSHAFT/3RD GEAR
⑰ SEALING RINGS, 35 mm
⑱ SEALING RING, 29 mm
⑲ NEEDLE BEARING
⑳ SET RING
㉑ COUNTERSHAFT REVERSE GEAR COLLAR
㉒ NEEDLE BEARING
㉓ COUNTERSHAFT REVERSE GEAR
㉔ REVERSE SELECTOR
㉕ REVERSE SELECTOR HUB
㉖ COUNTERSHAFT 4TH GEAR
㉗ NEEDLE BEARING
㉘ DISTANCE COLLAR Selective part
㉚ COUNTERSHAFT 2ND GEAR
㉛ THRUST NEEDLE BEARING
㉜ COUNTERSHAFT 3RD GEAR
㉝ NEEDLE BEARING
㉞ THRUST NEEDLE BEARING
㉟ COUNTERSHAFT 3RD GEAR COLLAR
㊱ 3RD CLUTCH ASSEMBLY
㊲ O-RINGS Replace.
㊳ COUNTERSHAFT
㊴ REVERSE IDLER GEAR SHAFT HOLDER
㊵ REVERSE IDLER GEAR SHAFT SPRING
㊶ STEEL BALL
㊷ NEEDLE BEARING
㊸ CONNECTOR HOLDER
㊹ COUNTERSHAFT SPEED SENSOR
㊺ MAINSHAFT SPEED SENSOR
㊻ MAINSHAFT SPEED SENSOR WASHER
㊼ O-RING Replace.
㊽ LUBRICATION PIPE
㊾ SET RING Replace.
㊿ TAPERED ROLLER BEARING
(51) SECONDARY DRIVEN GEAR/SECONDARY DRIVEN GEAR SHAFT
(52) TAPERED ROLLER BEARING
(53) SECONDARY GEAR SHAFT OIL SEAL Replace.
(54) EXTENSION SHAFT
(55) THRUST SHIM, 68 mm Selective part
(56) BEARING OUTER RACE
(57) SNAP RINGS
(58) TRANSMISSION HOUSING COUNTERSHAFT BEARING
(59) TRANSMISSION HOUSING MAINSHAFT BEARING
(60) DOWEL PIN
(61) TRANSMISSION HOUSING GASKET Replace.
(62) REVERSE IDLER GEAR
(63) BEARING OUTER RACE
(64) TORQUE CONVERTER HOUSING
(65) TORQUE CONVERTER HOUSING OIL SEAL Replace.
(66) SNAP RING, 74 mm

TORQUE SPECIFICATIONS

No.	Torque Value	Bolt Size	Remarks
A	12 N·m (1.2 kg-m, 9 lb-ft)	6 x 1.0 mm	
C	45 N·m (4.5 kg-m, 33 lb-ft)	10 x 1.25 mm	
I	34 N·m (3.4 kg-m, 25 lb-ft)	8 x 1.25 mm	

Illustrated Index

Torque Converter Housing/Valve Body

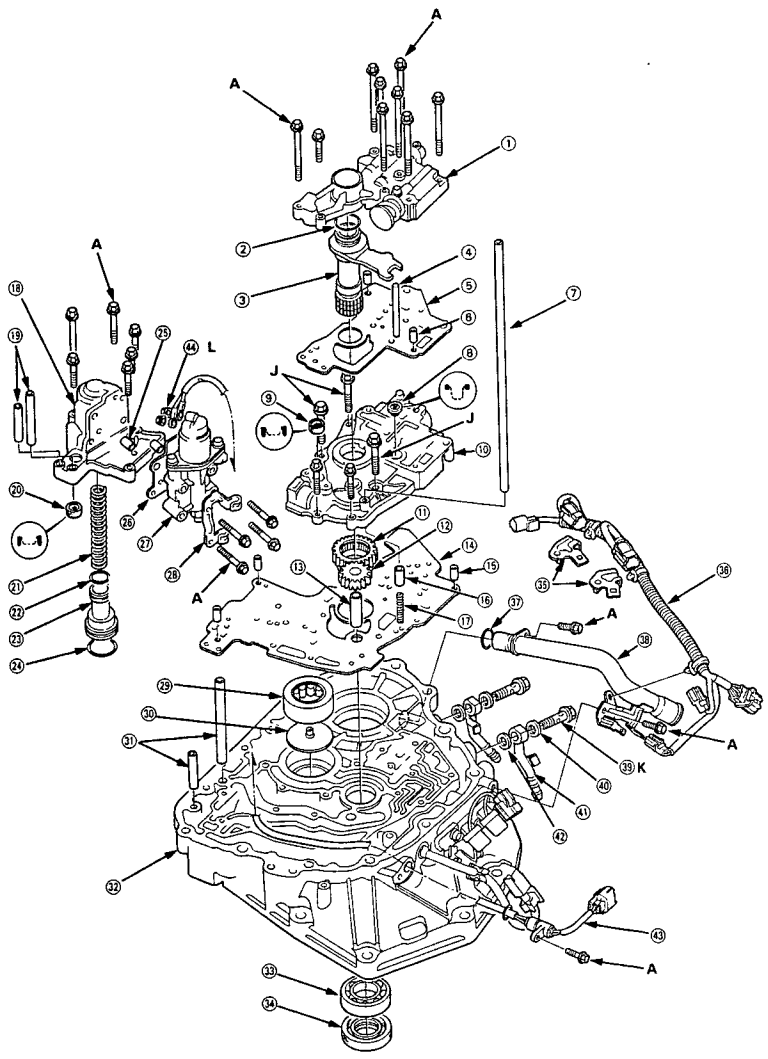

① REGULATOR VALVE BODY
② O-RING Replace.
③ STATOR SHAFT
④ STOPPER SHAFT
⑤ REGULATOR SEPARATOR PLATE
⑥ DOWEL PIN
⑦ OIL FEED PIPE
⑧ FILTER Replace.
⑨ FILTER Replace.
⑩ OIL PUMP BODY
⑪ OIL PUMP DRIVE GEAR
⑫ OIL PUMP DRIVEN GEAR
⑬ OIL PUMP DRIVEN GEAR SHAFT
⑭ OIL PUMP BODY SEPARATOR PLATE
⑮ DOWEL PIN
⑯ TORQUE CONVERTER CHECK VALVE
⑰ TORQUE CONVERTER CHECK VALVE SPRING
⑱ 2ND ACCUMULATOR BODY
⑲ OIL PIPES
⑳ FILTER Replace.
㉑ 2ND ACCUMULATOR SPRING
㉒ O-RING Replace.
㉓ 2ND ACCUMULATOR PISTON
㉔ O-RING Replace.
㉕ DOWEL PIN
㉖ THROTTLE VALVE BODY SEPARATOR PLATE
㉗ THROTTLE VALVE BODY
㉘ HARNESS CLAMP
㉙ TORQUE CONVERTER HOUSING COUNTERSHAFT NEEDLE BEARING
㉚ OIL GUIDE PLATE
㉛ OIL PIPES
㉜ TORQUE CONVERTER HOUSING
㉝ TORQUE CONVERTER HOUSING MAINSHAFT BALL BEARING
㉞ OIL SEAL Replace.
㉟ CONNECTOR HOLDERS
㊱ TRANSMISSION SUB-HARNESS
㊲ O-RING Replace.
㊳ ATF LEVEL GAUGE PIPE
㊴ JOINT BOLT
㊵ SEALING WASHER Replace.
㊶ ATF COOLER PIPE
㊷ SEALING WASHER Replace.
㊸ LINEAR SOLENOID HARNESS
㊹ FLANGE NUT, 5 mm

TORQUE SPECIFICATIONS

No.	Torque Value	Bolt Size	Remarks
A	12 N·m (1.2 kg-m, 9 lb-ft)	6 x 1.0 mm	
J	18 N·m (1.8 kg-m, 13 lb-ft)	8 x 1.25 mm	
K	29 N·m (2.9 kg-m, 21 lb-ft)	12 x 1.25 mm	Joint Bolt
L	8 N·m (0.8 kg-m, 6 lb-ft)	5 x 0.8 mm	Flange Nut

Transmission Housing/Lower Valve Body Assembly

Removal

NOTE:
- Clean all parts thoroughly in solvent or carburetor cleaner and dry with compressed air.
- Blow out all passages.
- When removing the lower valve body assembly, replace the following:
  - O-rings
  - Oil pan gasket
  - Sealing washer

CAUTION: Do not turn over the transmission before removing the oil pan.

1. Remove the eight bolts securing the oil pan then remove the oil pan and oil pan gasket.

2. Disconnect the shift control solenoid valve connector from the tansmission sub-harness connector.

3. Shift the control shaft to [P] position by turning the detent lever.

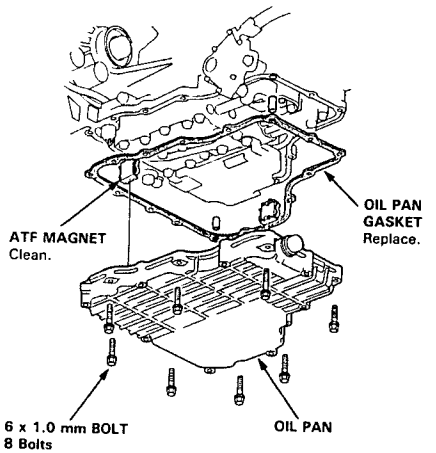

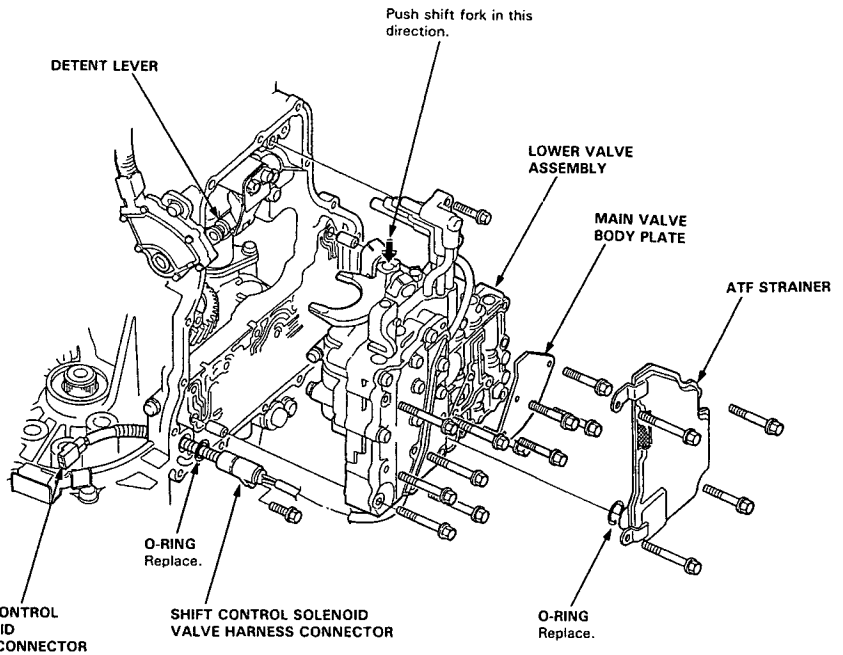

4. Remove the four bolts securing the ATF strainer then remove the ATF strainer.

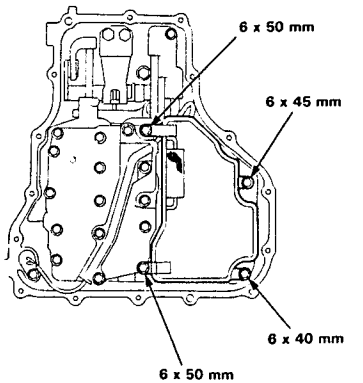

5. Remove the four bolts securing the main valve body plate then remove the main valve body plate.

6. Remove the four bolts securing the harness cover then remove the harness cover.

7. Remove the bolt securing the shift control solenoid valve harness connector then remove the connector.

8. Push the shift fork shaft to the torque converter side.

9. Remove the six bolts securing the lower valve body assembly then remove the lower valve body assembly.

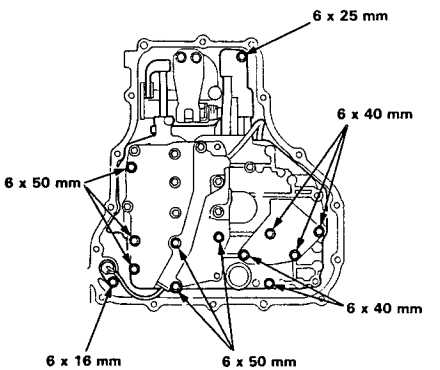

10. Clean the inlet opening of the ATF strainer thoroughly with compressed air, then check that it is in good condition, and the inlet opening is not clogged.

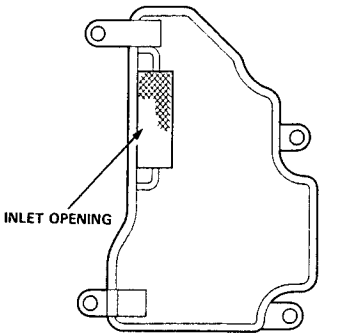

ATF STRAINER

11. Replace the ATF strainer if it is clogged or damaged.

    NOTE: The ATF strainer can be reused if it is not clogged.

12. Remove the ATF magnet from the oil pan then clean the ATF magnet.

Rear Cover

Removal

NOTE:
- Clean all parts thoroughly in solvent or carburetor cleaner and dry with compressed air.
- Blow out all passages.
- When removing the rear cover, replace the following:
  - O-rings
  - Rear cover gasket
  - Mainshaft and countershaft locknuts
  - Mainshaft and countershaft disc springs

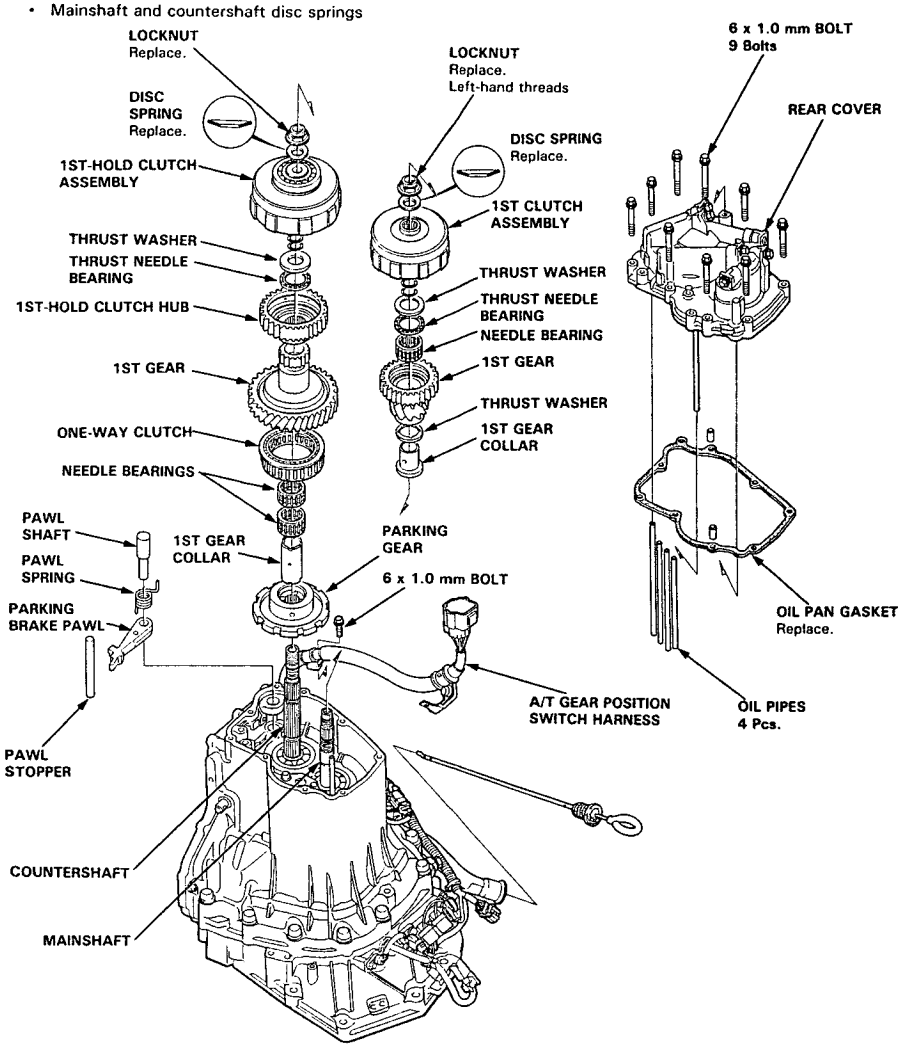

1. Remove the bolt securing the A/T gear position switch harness clamp.
2. Remove the nine bolts securing the rear cover then remove the rear cover.
3. Remove the four oil pipes from the transmission housing.
4. Slip the special tool on the mainshaft.

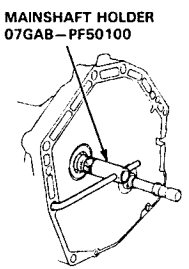

5. Engage the parking brake pawl with the parking gear.
6. Cut the lock tabs of each shaft locknut using a chisel as shown. Then remove the locknuts and disc springs from each shaft.

CAUTION: Always wear the safety glasses.

NOTE:
- Mainshaft locknut has left-hand threads.
- Keep all of the chiseled particles out of the transmission.

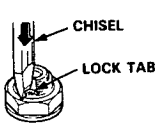

7. Remove the special tool from the mainshaft after removing the locknuts.
8. Remove the 1st-hold clutch assembly, thrust washer, thrust needle bearing and 1st-hold clutch hub from the countershaft.
9. Remove the 1st clutch assembly, thrust washer, thrust needle bearing and 1st gear from the mainshaft.
10. Remove the 1st gear, one-way clutch, needle bearings, 1st gear collar and parking gear from the countershaft.
11. Remove the thrust washer and 1st gear collar from the mainshaft.
12. Remove the parking brake pawl, shaft, spring, and stopper from the transmission housing.

Transmission Housing

Removal

NOTE:
- Clean all parts thoroughly in solvent or carburetor cleaner and dry with compressed air.
- Blow out all passages.
- When removing the transmission housing, replace the following:
  - O-rings
  - Transmission housing gasket

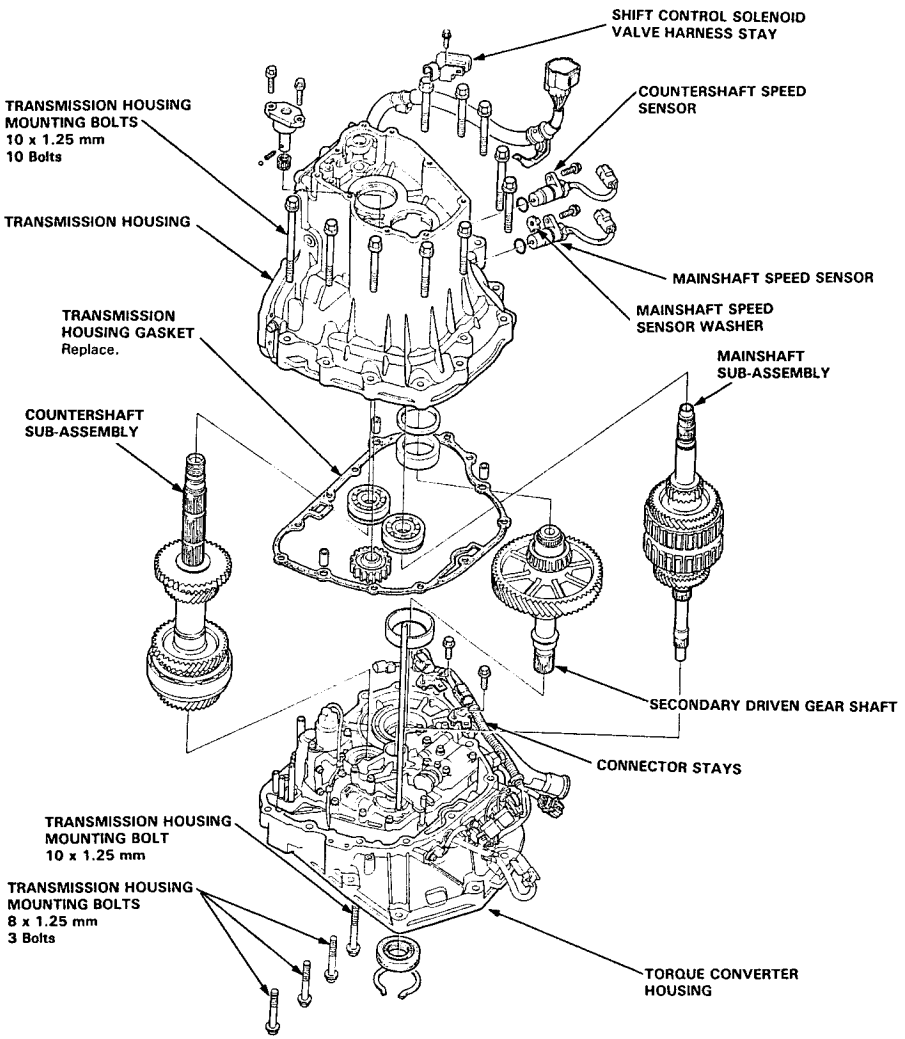

1. Remove the bolts securing the shift control solenoid vavle harness stay, mainshaft speed sensor connector stay and countershaft speed sensor connector stay.

2. Remove the countershaft speed sensor and mainshaft speed sensor with mainshaft speed sensor washer from the transmission housing.

3. Remove the ten bolts securing the transmission housing, and remove the 10 mm bolt and three 8 mm bolts securing the transmission housing from the torque converter housing side.

4. Install the special tool on the transmission housing, then remove the transmission housing as shown.

   CAUTION: Make sure that the mainshaft and countershaft speed sensors have been removed from the transmission housing before removing the transmission housing from the torque converter housing.

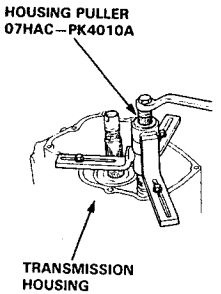

5. Remove the mainshaft sub-assembly and countershaft sub-assembly together.

   NOTE: When removing the shafts, take care to prevent damage to the regulator valve body.

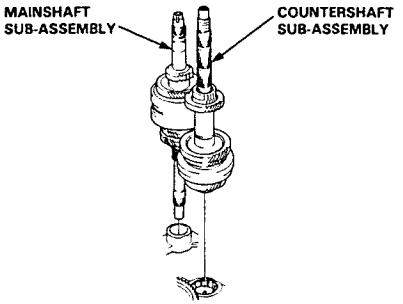

6. Remove the secondary driven gear shaft from the torque converter housing.

Torque Converter Housing/Valve Body

Removal

NOTE:
- Clean all parts thoroughly in solvent or carburetor cleaner and dry with compressed air.
- Blow out all passages.
- When removing the valve bodies, replace the following:
  - O-rings
  - Filters

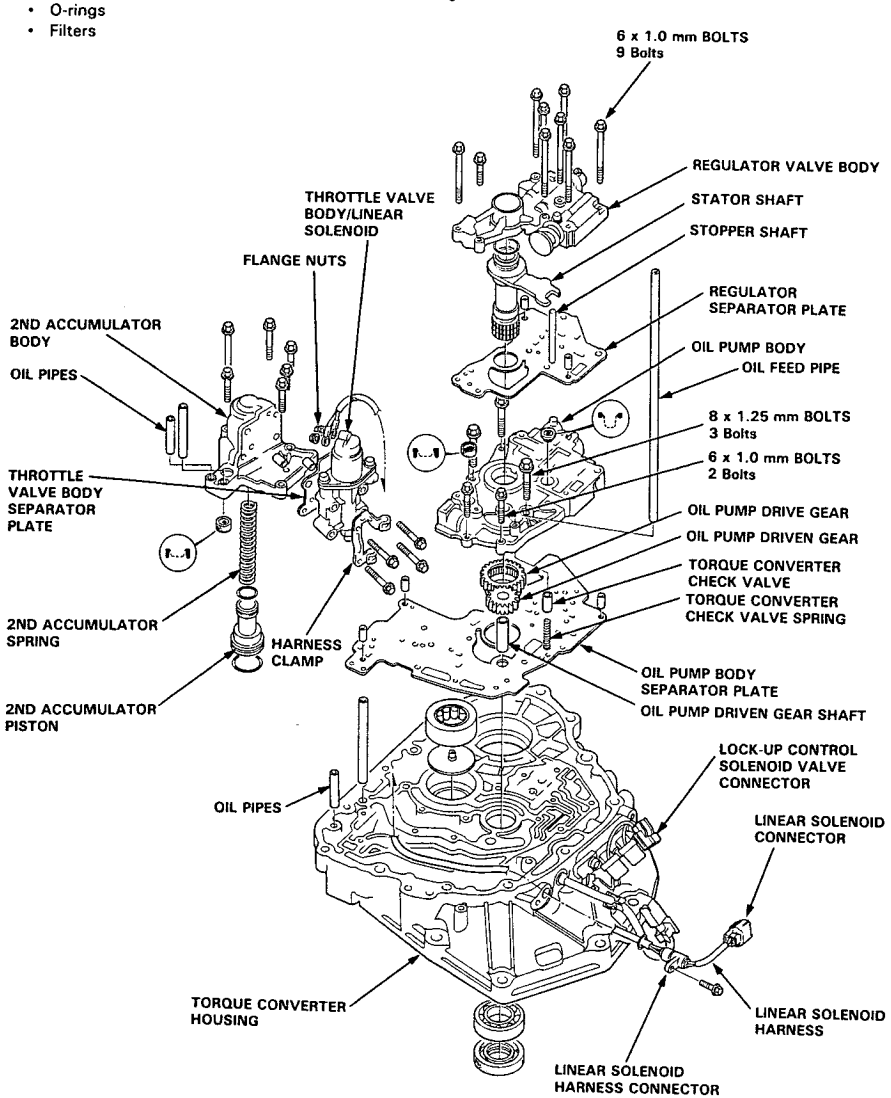

1. Remove the oil feed pipe from the oil pump body and two oil pipes from the torque converter housing.
2. Remove the two flange nuts securing the linear solenoid harness then disconnect the harness from the linear solenoid and harness clamp.
3. Remove the nine bolts securing the regulator valve body then remove the regulator valve body.
4. Remove the stopper shaft and stator shaft.
5. Remove the regulator separator plate with two dowel pins.
6. Remove the six bolts securing the 2nd accumulator body then remove the 2nd accumulator body and throttle valve body/linear solenoid as an assembly.
7. Remove the three 8 mm bolts and two 6 mm bolts securing the oil pump body then remove the oil pump body.
8. Remove the oil pump gears and oil pump driven gear shaft.
9. Remove the torque converter check valve and spring.
10. Remove the oil pump body separator plate with three dowel pins.
11. Remove the bolt securing the linear solenoid harness connector then remove the linear solenoid harness from the torque converter housing.
12. Disconnect the lock-up control solenoid valve connector then remove the transmission sub-harness.

Lower Valve Body Assembly

Disassembly/Reassembly

NOTE:
- Clean all parts thoroughly in solvent or carburetor cleaner and dry with compressed air.
- Blow out all passages.
- Coat all parts with ATF before reassembly.
- Replace the filters.
- Install the filters in the direction shown.

CAUTION: Do not use a magnet to remove the check balls; it may magnetize the balls.

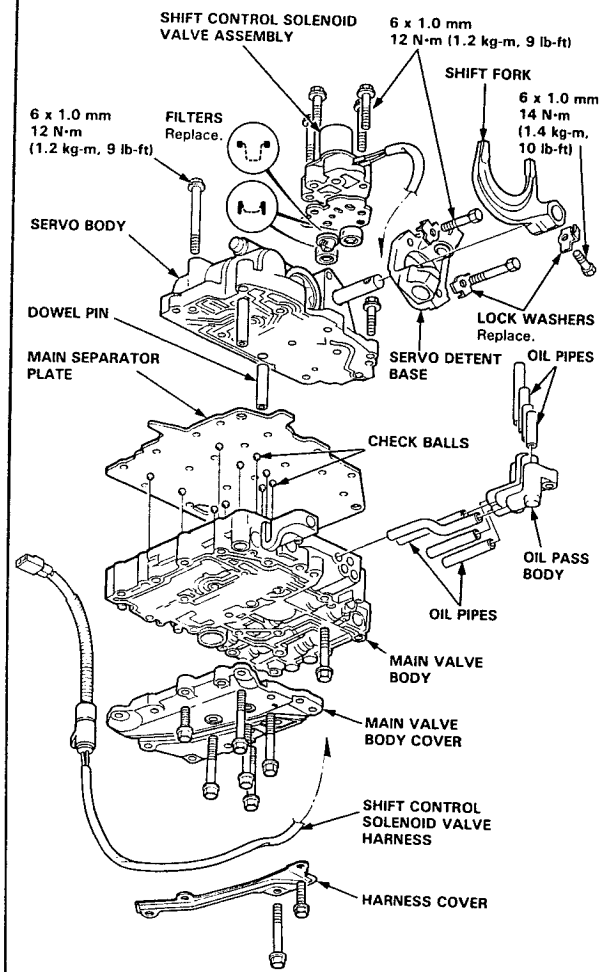

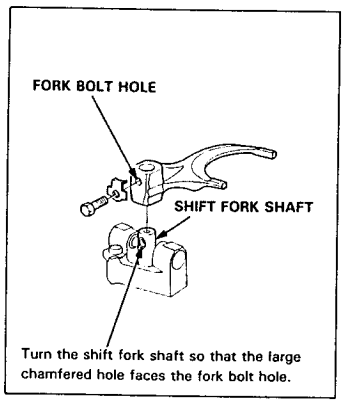

6 mm BOLT LENGTH

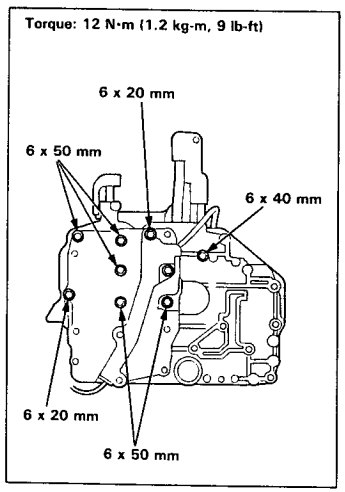

Valve Body

Repair

NOTE: This repair is only necessary if one or more of the valves in a valve body do not slide smoothly in their bores. You may use this procedure to free the valves in the valve bodies.

1. Soak a sheet of #600 abrasive paper in ATF for about 30 minutes.
2. Carefully tap the valve body so the sticking valve drops out of its bore.

   CAUTION: It may be necessary to use a small screwdriver to pry the valve free. Be careful not to scratch the bore with the screwdriver.
3. Inspect the valve for any scuff marks. Use the ATF-soaked #600 paper to polish off any burrs that are on the valve, then wash the valve in solvent and dry it with compressed air.
4. Roll up half a sheet of ATF-soaked paper and insert it in the valve bore of the sticking valve.
   Twist the paper slightly, so that it unrolls and fits the bore tightly, then polish the bore by twisting the paper as you push it in and out.

   CAUTION: The valve body is aluminum and doesn't require much polishing to remove any burrs.

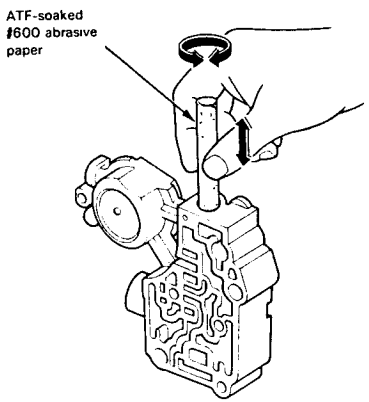

5. Remove the #600 paper and thoroughly wash the entire valve body in solvent, then dry with compressed air.
6. Coat the valve with ATF then drop it into its bore. It should drop to the bottom of the bore under its own weight. If not, repeat step 4, then retest.

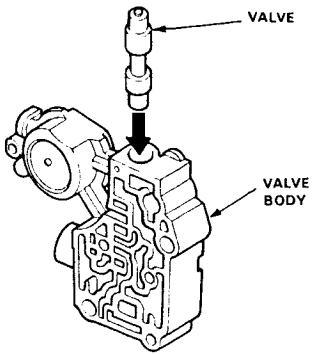

7. Remove the valve and thoroughly clean it and the valve body with solvent. Dry all parts with compressed air, then reassemble using ATF as a lubricant.

Valve

Assembly

NOTE: Coat all parts with ATF before assembly.

- Install the valve, valve spring and cap in the valve body and secure with the roller.

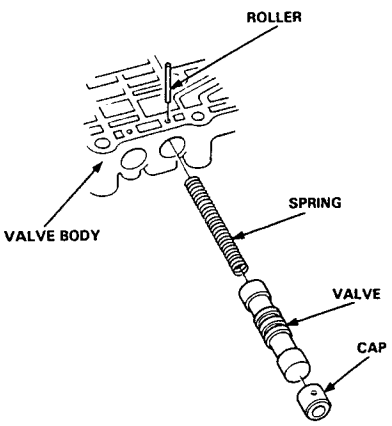

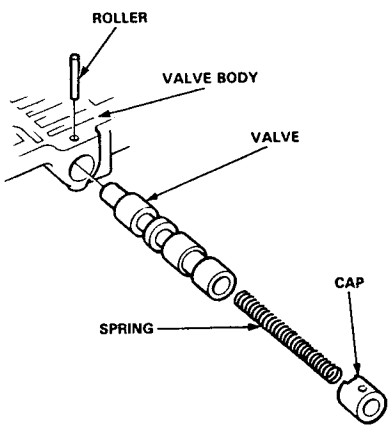

- Set the spring in the valve and install it in the valve body. Push the spring in with a screwdriver, then install the spring seat.

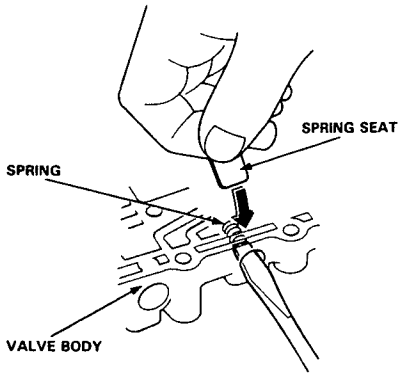

Valve Caps

Description

- Caps with one projected tip and one flat end are installed with the flat end toward the inside of the valve body.
- Caps with a projected tip on each end are installed with the smaller tip toward the inside of the valve body. The small tip is a spring guide.

Toward outside of valve body.

Toward inside of valve body.

- Caps with one projected tip and hollow end are installed with the tip toward the inside of the valve body. The tip is a spring guide.

Toward outside of valve body.

Toward inside of valve body.

- Caps with hollow ends are installed with the hollow end away from the inside of the valve body.
- Caps with notched ends are installed with the notch toward the inside of the valve body.
- Caps with flat ends and a hole through the center are installed with the smaller hole toward the inside of the valve body.

Toward outside of valve body.

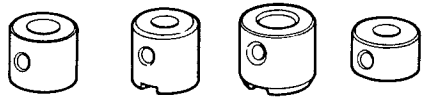

Toward inside of valve body.

Main Valve Body

Disassembly/Inspection/Reassembly

NOTE:
- Clean all parts thoroughly in solvent or carburetor cleaner and dry with compressed air.
- Blow out all passages.
- Replace valve body as an assembly if any parts are worn or damaged.
- Check all valves for free movement. If any fail to slide freely, see Valve Body Repair on page 14-123.
- Coat all parts with ATF before reassembly.

CAUTION: Do not use a magnet to remove the check balls; it may magnetize the balls.

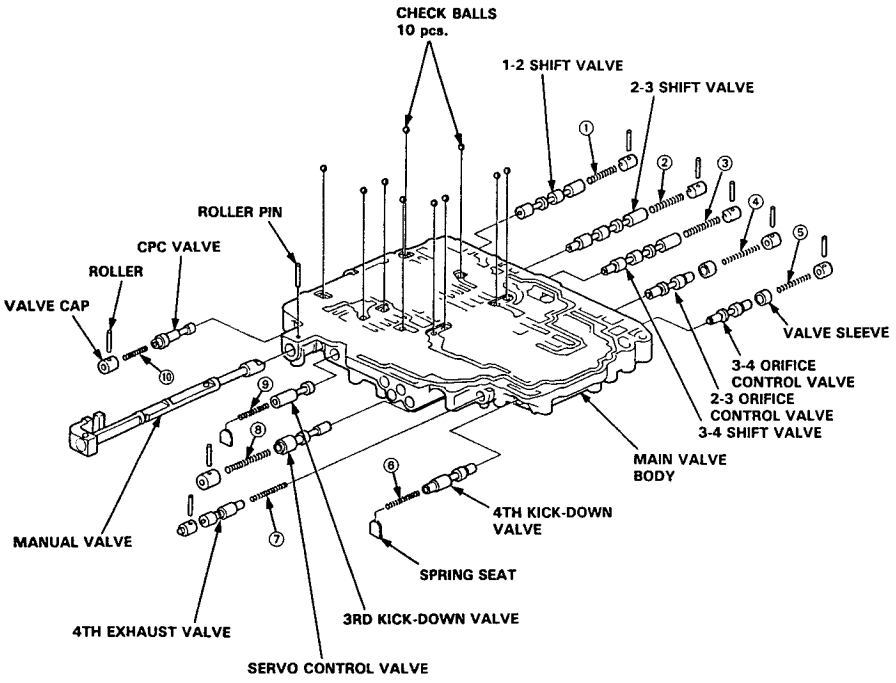

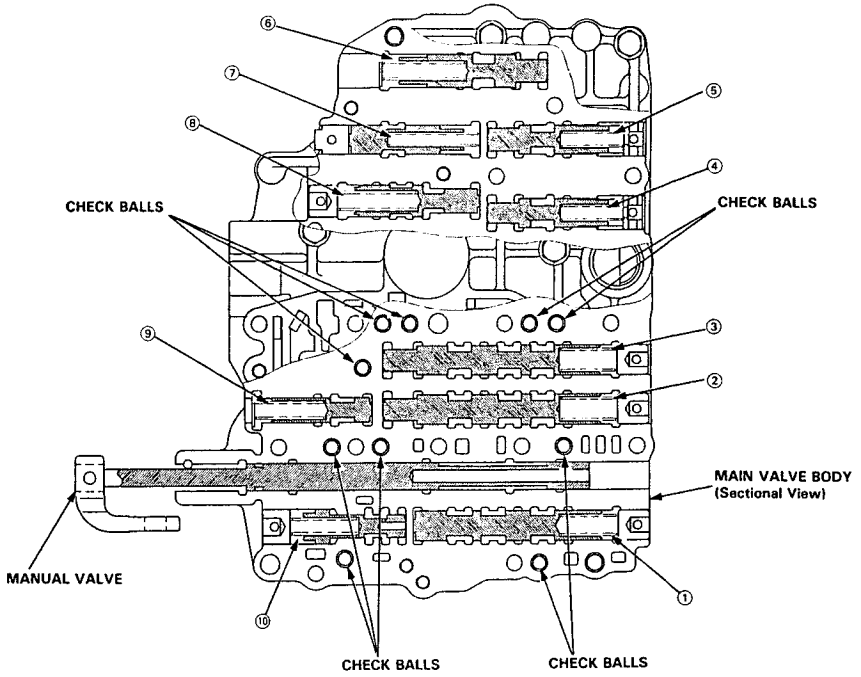

SPRING SPECIFICATIONS

Unit: mm (in)

No.	Spring	Standard (New)			
		Wire Dia.	O.D.	Free Length	No. of Coils
①	1-2 shift valve spring	0.9 (0.035)	8.6 (0.339)	40.4 (1.591)	14.5
②	2-3 shift valve spring	0.9 (0.035)	9.6 (0.378)	43.0 (1.693)	12.1
③	3-4 shift valve spring	0.9 (0.035)	9.6 (0.378)	43.0 (1.693)	12.1
④	2-3 orifice control valve spring	0.7 (0.028)	6.6 (0.260)	39.1 (1.539)	22.0
⑤	3-4 orifice control valve spring	0.7 (0.028)	6.6 (0.260)	34.8 (1.370)	22.0
⑥	4th kick-down valve spring	1.0 (0.039)	7.6 (0.299)	48.2 (1.898)	22.2
⑦	4th exhaust valve spring	0.6 (0.024)	5.6 (0.220)	49.1 (1.933)	21.0
⑧	Servo control valve spring	1.0 (0.039)	8.1 (0.319)	52.1 (2.051)	20.8
⑨	3rd kick-down valve spring	1.0 (0.039)	7.4 (0.291)	38.6 (1.520)	16.0
⑩	CPC valve spring	1.0 (0.039)	6.8 (0.268)	36.1 (1.421)	17.8

Servo Body

Disassembly/Inspection/Reassembly

NOTE:
- Clean all parts thoroughly in solvent or carburetor cleaner and dry with compressed air.
- Blow out all passages.
- Replace valve body as an assembly if any parts are worn or damaged.
- Coat all parts with ATF before reassembly.
- Replace the O-rings and filters.
- Install the filters in the direction shown.

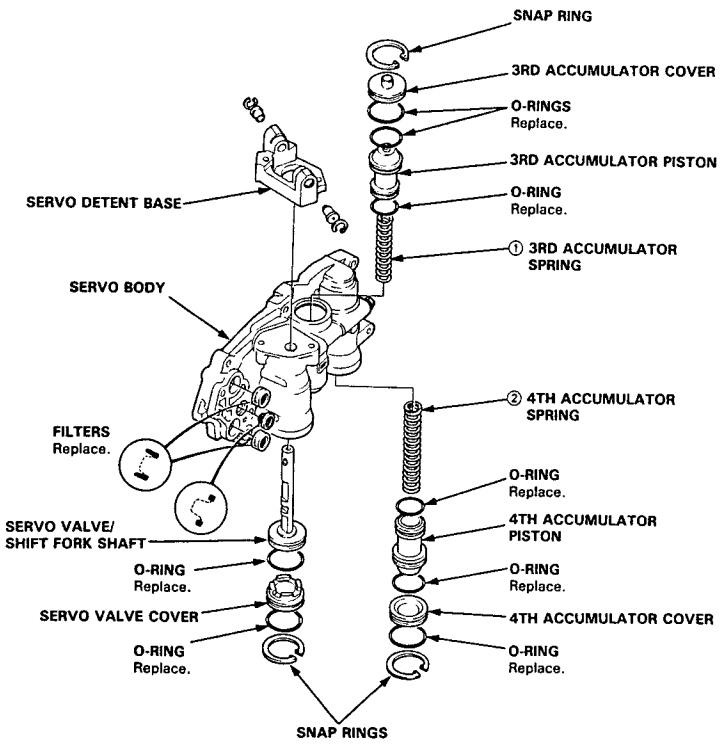

SPRING SPECIFICATIONS

Unit: mm (in)

No.	Spring	Standard (New)			
		Wire Dia.	O.D.	Free Length	No. of Coils
①	3rd accumulator spring	3.2 (0.126)	20.5 (0.807)	89.0 (3.504)	12.6
②	4th accumulator spring	3.3 (0.130)	20.5 (0.807)	74.1 (2.917)	11.2

Regulator Valve Body

Disassembly/Inspection/Reassembly

NOTE:
- Clean all parts thoroughly in solvent or carburetor cleaner and dry with compressed air.
- Blow out all passages.
- Replace valve body as an assembly if any parts are worn or damaged.
- Check all valves for free movement. If any fail to slide freely, see Valve Body Repair on page 14-123.

1. Hold the regulator spring cap in place while removing the lock bolt. Once the bolt is removed, release the spring cap slowly.

   CAUTION: The regulator spring cap can pop out when the lock bolt is removed.

2. Reassembly is in the reverse order of disassembly.

   NOTE:
   - Coat all parts with ATF.
   - Align the hole in the regulator spring cap with the hole in the valve body, press the regulator spring cap into the body and tighten the lock bolt.

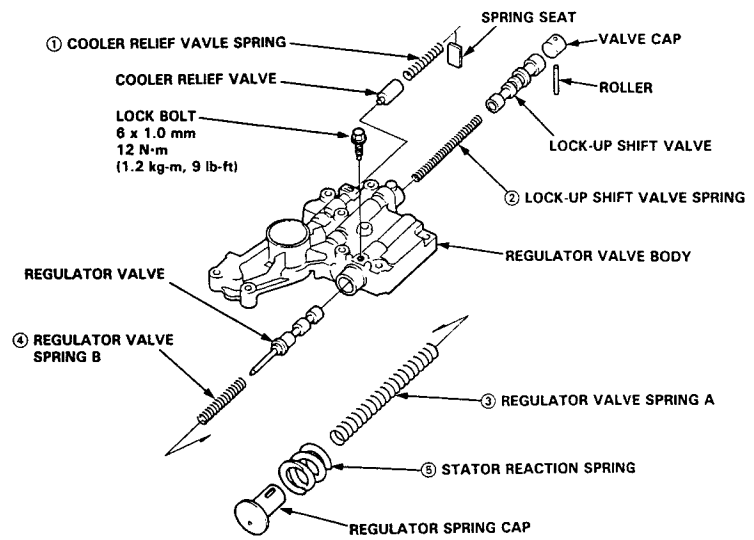

SPRING SPECIFICATIONS

Unit: mm (in)

No.	Spring	Standard (New)			
		Wire Dia.	O.D.	Free Length	No. of Coils
①	Cooler relief valve spring	1.1 (0.043)	8.4 (0.331)	46.8 (1.843)	17.0
②	Lock-up shift valve spring	0.9 (0.035)	7.6 (0.299)	73.7 (2.902)	32.0
③	Regulator valve spring A	1.8 (0.071)	14.7 (0.579)	88.6 (3.488)	16.5
④	Regulator valve spring B	1.8 (0.071)	9.6 (0.378)	44.0 (1.732)	7.5
⑤	Stator reaction spring	6.0 (0.236)	38.4 (1.512)	30.3 (1.193)	2.0

Oil Pump Body

Disassembly/Inspection/Reassembly

NOTE:
- Clean all parts thoroughly in solvent or carburetor cleaner and dry with compressed air.
- Blow out all passages.
- Replace valve body as an assembly if any parts are worn or damaged.
- Check all valves for free movement. If any fail to slide freely, see Valve Body Repair on page 14-123.
- Coat all parts with ATF before reassembly.
- Install the filters in the direction shown.

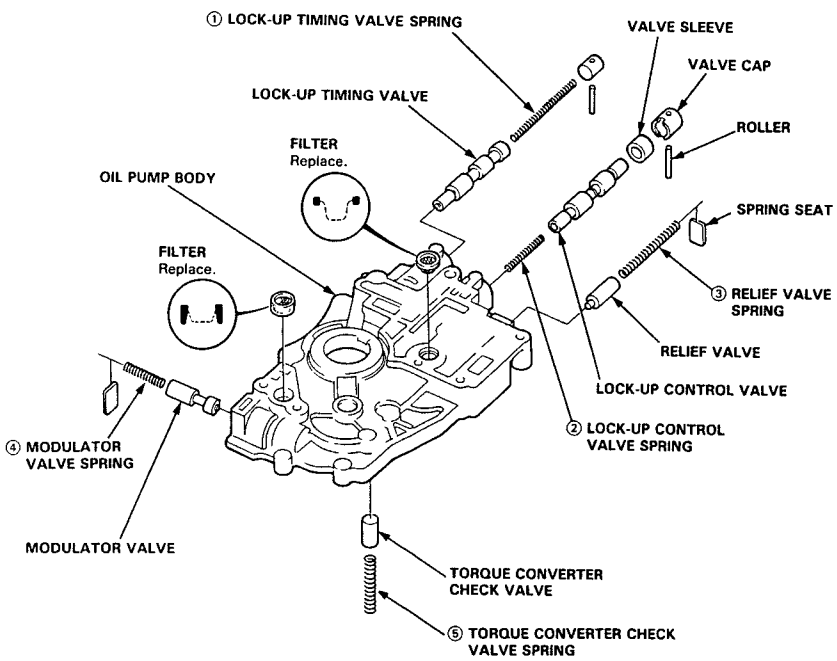

SPRING SPECIFICATIONS

Unit: mm (in)

No.	Spring	Standard (New)			
		Wire Dia.	O.D.	Free Length	No. of Coils
①	Lock-up timing valve spring	0.8 (0.031)	6.6 (0.260)	59.3 (2.335)	38.8
②	Lock-up control valve spring	0.7 (0.028)	6.6 (0.260)	38.0 (1.496)	14.1
③	Relief valve spring	1.1 (0.043)	8.4 (0.331)	41.8 (1.646)	15.7
④	Modulator valve spring	1.4 (0.055)	9.4 (0.370)	32.4 (1.276)	10.5
⑤	Torque converter check valve spring	1.1 (0.043)	8.4 (0.331)	41.8 (1.646)	15.7

Oil Pump

Inspection

1. Install the oil pump gears and oil pump driven gear shaft in the oil pump body.

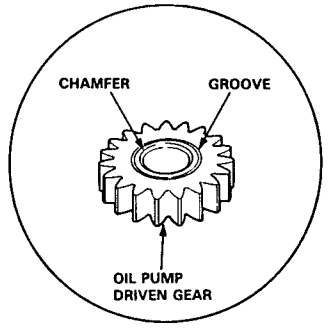

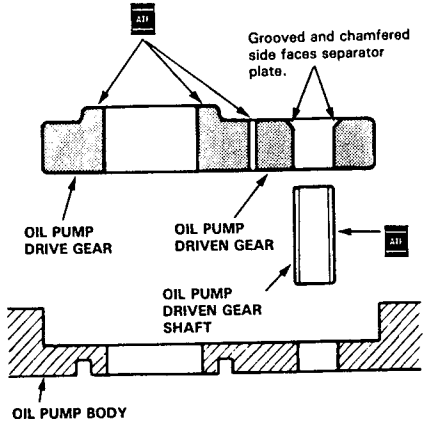

2. Measure the side clearance of the oil pump drive and driven gears.

   Oil Pump Gears Side (Radial) Clearance:
   Standard (New): Drive gear
   0.210–0.265 mm
   (0.0083–0.0104 in)
   Driven gear
   0.07–0.125 mm
   (0.0028–0.0049 in)

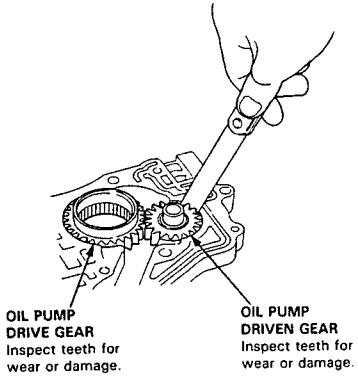

3. Remove the oil pump driven gear shaft.

4. Measure the thrust clearance of the oil pump driven gears-to-oil pump body.

   Oil Pump Drive/Driven Gears thrust (Axial) Clearance:
   Standard (New): 0.03–0.05 mm (0.001–0.002 in)
   Service Limit: 0.07 mm (0.0028 in)

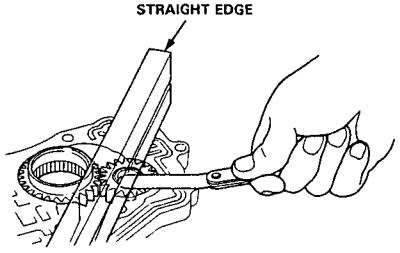

2nd Accumulator Body/Throttle Valve Body

Disassembly/Inspection/Reassembly

NOTE:
- Clean all parts thoroughly in solvent or carburetor cleaner and dry with compressed air.
- Blow out all passages.
- Replace valve body as an assembly if any parts are worn or damaged.
- Coat all parts with ATF before reassembly.
- Replace the O-rings and filter.
- Install the filter in the direction shown.

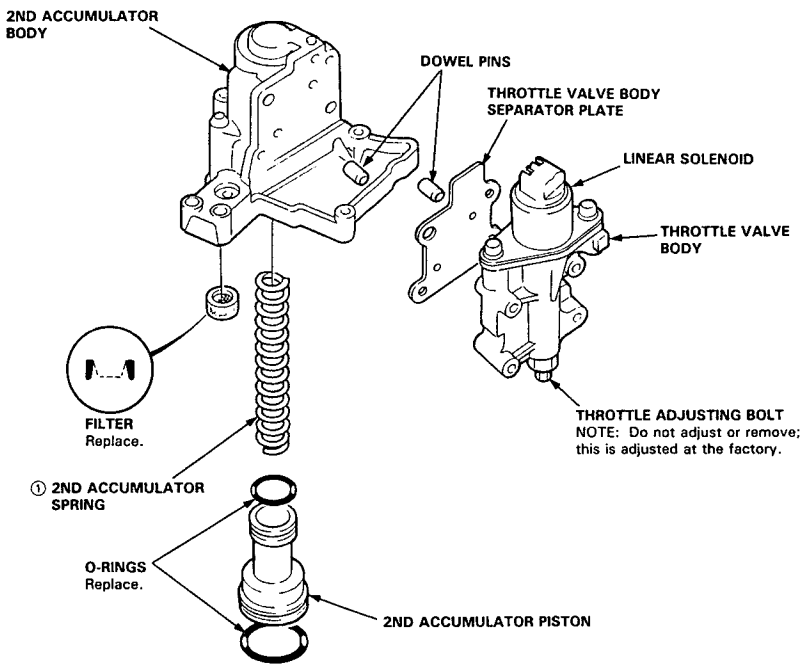

SPRING SPECIFICATIONS

Unit: mm (in)

No.	Spring	Standard (New)			
		Wire Dia.	O.D.	Free Length	No. of Coils
①	2nd accumulator spring	3.0 (0.118)	18.7 (0.736)	88.1 (3.468)	14.2

Throttle Valve Body/Linear Solenoid

Test

1. Connect the linear solenoid harness to the linear solenoid terminals.
2. Connect the A (RED: +) terminal of the linear solenoid to the positive battery terminal and the B (WHT: −) terminal to the negative battery terminal. Check that the throttle valve moves.
3. Repeat the above steps 1 and 2.

   NOTE: You can see the movement of the throttle valve through the oil passage in the mounting surface of the throttle valve body.

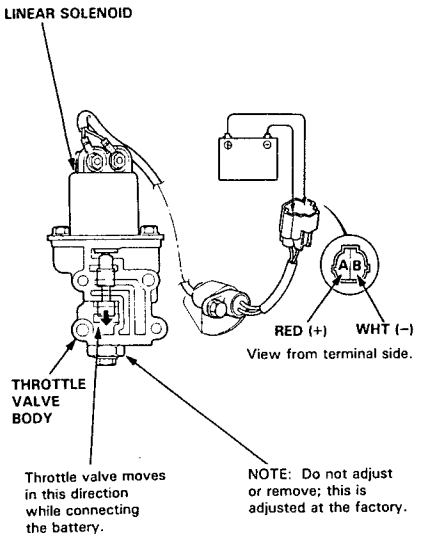

4. If the throttle valve binds, or moves sluggishly, or the linear solenoid does not operate, replace the throttle valve body/linear solenoid as an assembly.
5. If the linear solenoid does not operate, disconnect the linear solenoid harness from the linear solenoid assembly. Connect the battery directly to the linear solenoid.
6. If the linear solenoid operates after connecting the battery, and the throttle valve movement is OK, replace the linear solenoid harness.

Replacement

NOTE: Throttle valve body/linear solenoid must be replaced as an assembly.

1. Check the throttle valve body passages for dust or dirt, and replace as an assembly, if necessary.
2. Clean the mounting surface and oil passages of the throttle valve body.
3. Assemble the throttle valve body/linear solenoid to the 2nd accumulator body.

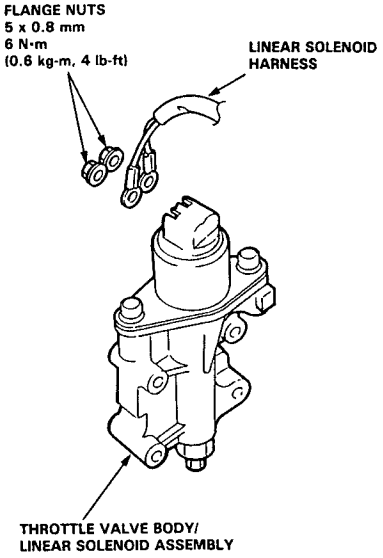

1st Accumulator/1st-hold Accumulator

Disassembly/Inspection/Reassembly

NOTE:
- Clean all parts thoroughly in solvent or carburetor cleaner and dry with compressed air.
- Blow out all passages.
- Coat all parts with ATF before reassembly.
- Replace the O-rings and sealing washer.

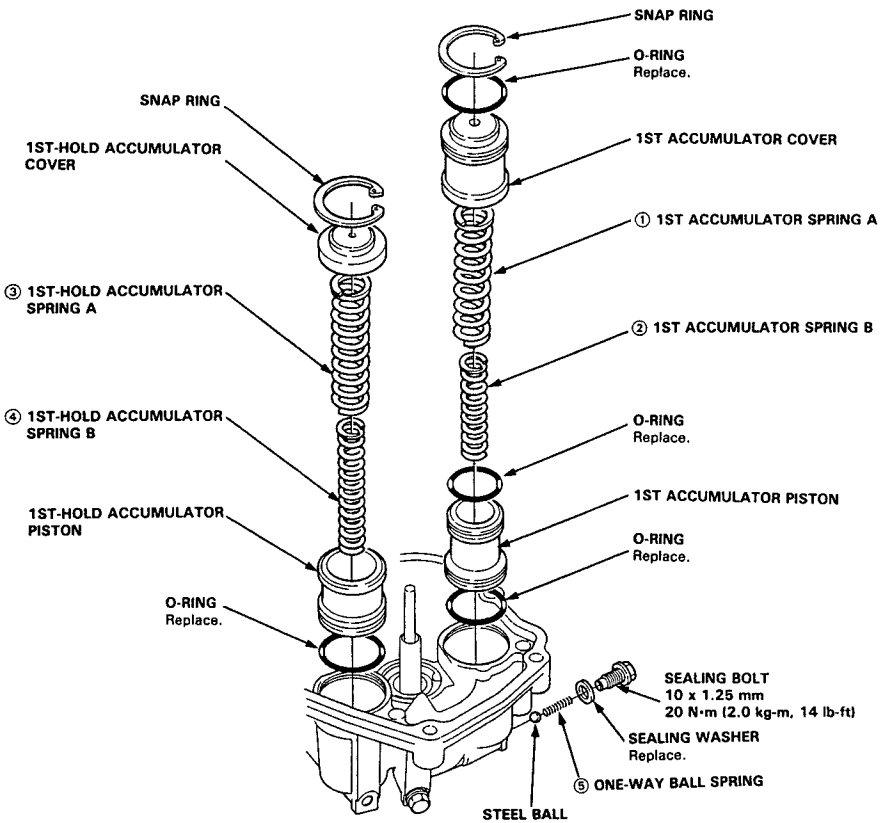

SPRING SPECIFICATIONS

Unit: mm (in)

No.	Spring	Standard (New)			
		Wire Dia.	O.D.	Free Length	No. of Coils
①	1st accumulator spring A	2.2 (0.087)	17.2 (0.677)	88.6 (3.488)	15.0
②	1st accumulator spring B	1.9 (0.075)	9.8 (0.386)	51.5 (2.028)	8.3
③	1st-hold accumulator spring A	3.5 (0.138)	21.6 (0.850)	55.9 (2.201)	7.7
④	1st-hold accumulator spring B	2.3 (0.091)	12.8 (0.504)	53.4 (2.102)	12.6
⑤	One-way ball spring	0.29 (0.011)	4.0 (0.157)	14.0 (0.551)	13.0

Mainshaft

Disassembly/Inspection/Reassembly

NOTE:
- Lubricate all parts with ATF during reassembly.
- Install the thrust needle bearings with unrolled edge of bearing retainer facing washer.
- Inspect the thrust needle bearings and the needle bearings for galling and rough movement.
- Before installing the O-rings, wrap the shaft splines with tape to prevent damage to the O-rings.
- Locknut has left-hand threads.

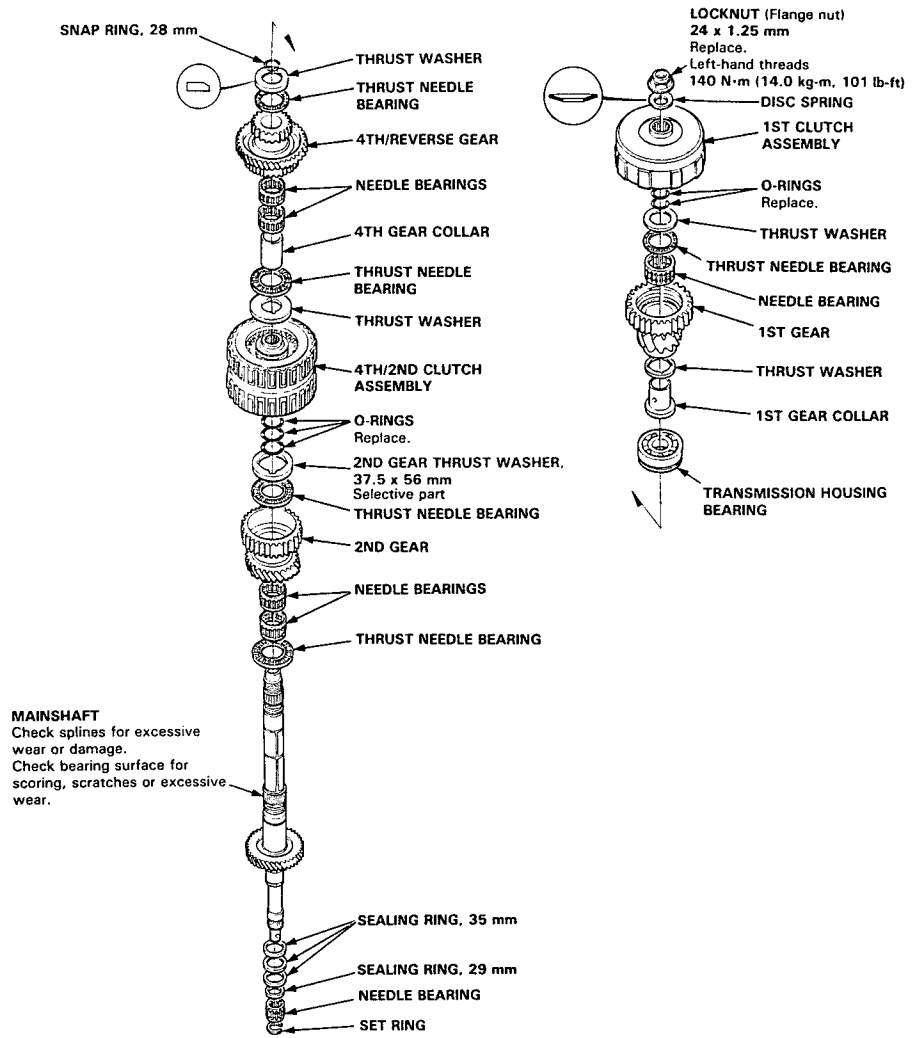

Mainshaft

Inspection

- Clearance Measurements

NOTE: Lubricate all parts with ATF during assembly.

1. Remove the mainshaft bearing from the transmission housing (see page 14-153).
2. Assemble the parts below on the mainshaft.

NOTE: Do not install the O-rings during inspection.

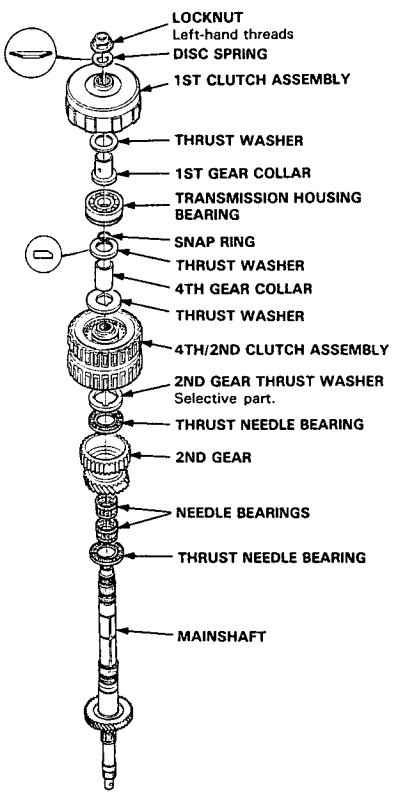

3. Torque the mainshaft locknut to 30 N·m (3.0 kg-m, 22 lb-ft).

NOTE: Mainshaft locknut has left-hand threads.

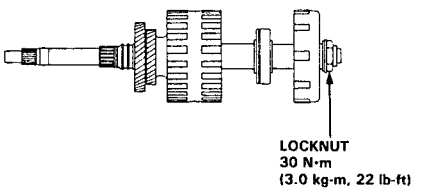

4. Move the 4th/2nd clutch assembly to check the axial clearances.
5. Attach the dial indicator to the mainshaft 2nd gear as shown.

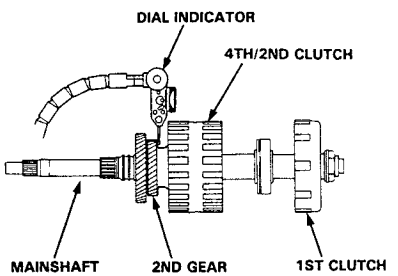

6. Measure the 2nd gear axial clearance while pushing the 4th/2nd clutch toward the 1st clutch.

STANDARD: 0.07–0.15 mm (0.003–0.006 in)

NOTE: Take measurements in at least three places and take the average as the actual clearance.

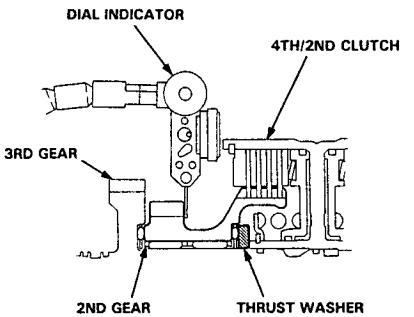

7. If the clearance is out of tolerance, remove the 2nd gear thrust washer and measure the thickness.

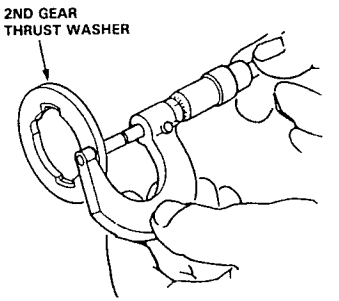

8. Select and install a new 2nd gear thrust washer then recheck.

2ND GEAR THRUST WASHER, 37.5 x 56 mm

No.	Part Number	Thickness
1	90441-PW4-000	4.00 mm (0.157 in)
2	90442-PW4-000	4.05 mm (0.159 in)
3	90443-PW4-000	4.10 mm (0.161 in)
4	90444-PW4-000	4.15 mm (0.163 in)
5	90445-PW4-000	4.20 mm (0.165 in)
6	90446-PW4-000	4.25 mm (0.167 in)
7	90447-PW4-000	4.30 mm (0.169 in)
8	90448-PW4-000	4.35 mm (0.171 in)
9	90449-PW4-000	4.40 mm (0.173 in)
10	90450-PW4-000	4.45 mm (0.175 in)
11	90451-PW4-000	4.50 mm (0.177 in)

9. After replacing the 2nd gear thrust washer, make sure that the clearance is within tolerance.

Countershaft

Disassembly/Inspection/Reassembly

NOTE:
- Lubricate all parts with ATF during reassembly.
- Install the thrust needle bearings with unrolled edge of bearing retainer facing washer.
- Inspect the thrust needle bearings and the needle bearings for galling and rough movement.
- Before installing the O-rings, wrap the shaft splines with tape to prevent damage to the O-rings.

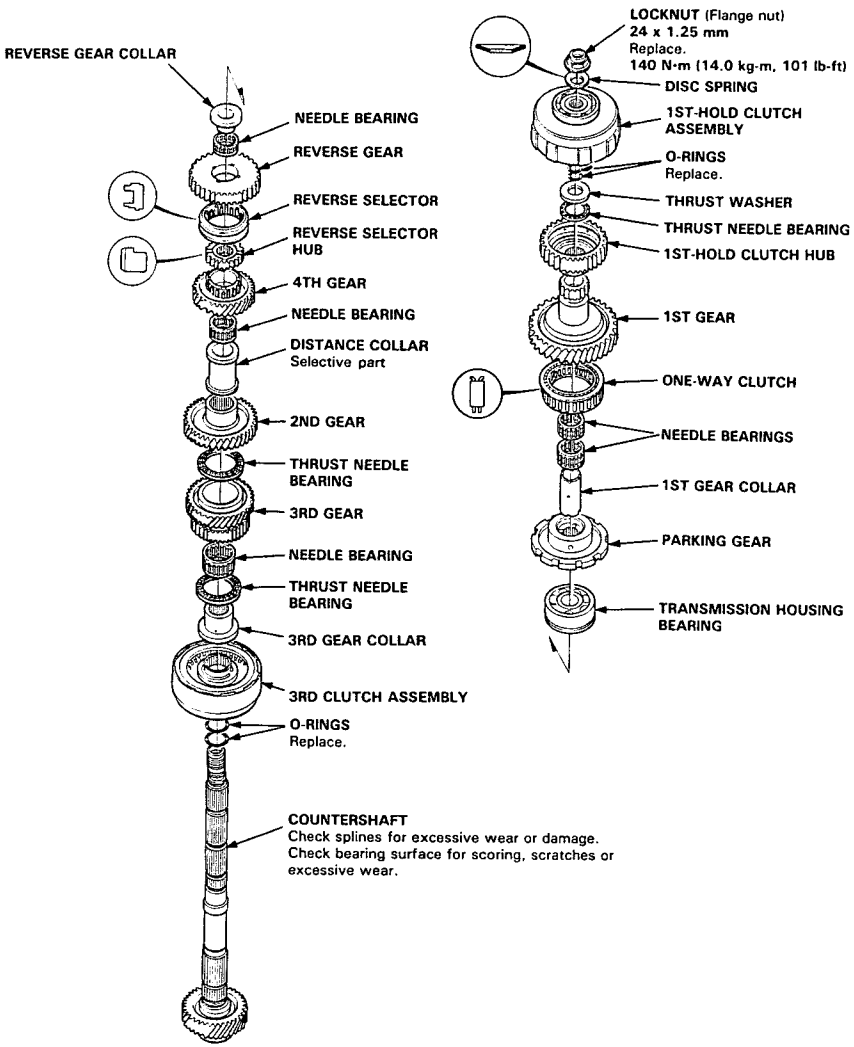

Inspection

- Clearance Measurement

NOTE: Lubricate all parts with ATF during assembly.

1. Remove the countershaft bearing from the transmission housing (see page 14-153).
2. Assemble the parts below on the countershaft.

NOTE: Do not install the O-rings during inspection.

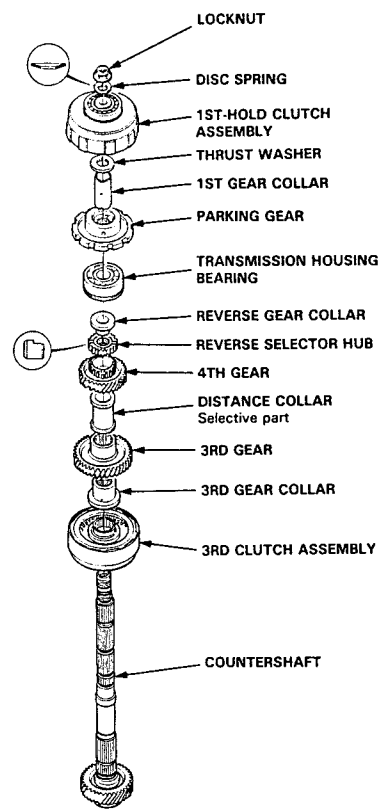

3. Torque the countershaft locknut to 30 N·m (3.0 kg-m, 22 lb-ft).

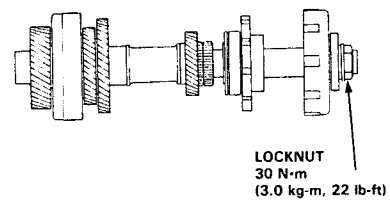

4. Hold the 4th gear against the distance collar. Measure the clearance between the 4th gear and the reverse selector hub with a feeler gauge.

NOTE: Take measurements in at least three places and take the average as the actual clearance.

STANDARD: 0.07–0.15 mm (0.003–0.006 in)

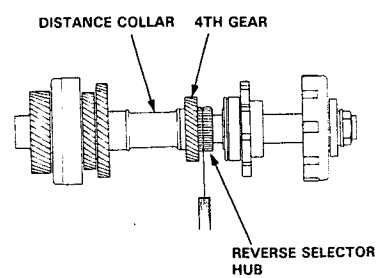

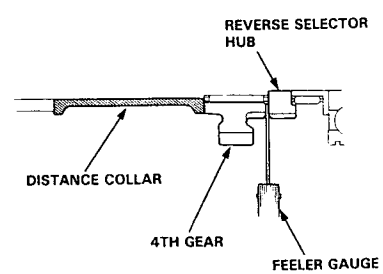

(cont'd)

Countershaft

Inspection (cont'd)

5. If the clearance is out of tolerance, remove the distance collar and measure the length.

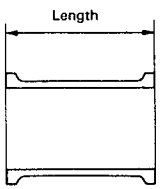

6. Select and install a new distance collar then recheck.

DISTANCE COLLAR 35 mm

No.	Part Number	Thickness
1	90501-PW7-000	65.65 mm (2.585 in)
2	90502-PW7-000	65.70 mm (2.587 in)
3	90503-PW7-000	65.75 mm (2.589 in)
4	90504-PW7-000	65.80 mm (2.591 in)
5	90505-PW7-000	65.85 mm (2.593 in)
6	90506-PW7-000	65.90 mm (2.594 in)
7	90507-PW7-000	65.95 mm (2.596 in)
8	90508-PW7-000	66.00 mm (2.598 in)
9	90509-PW7-000	66.05 mm (2.600 in)
10	90510-PW7-000	66.10 mm (2.602 in)

7. After replacing the distance collar, make sure that the clearance is within tolerance.

One-way Clutch/Parking Gear

Disassembly/Reassembly

1. Separate countershaft 1st gear from the parking gear by turning the parking gear in the direction shown.

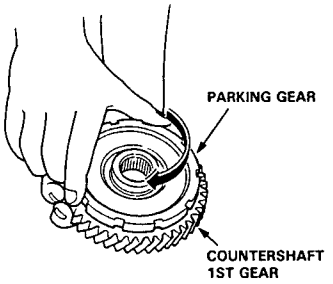

2. Remove the one-way clutch by prying it up with the end of a screwdriver.

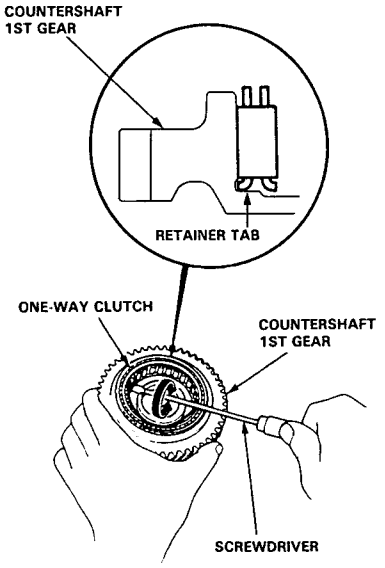

3. Hold countershaft 1st gear and turn the parking gear in the direction shown to be sure it turns freely.

Inspection

Inspect the parts as follows:

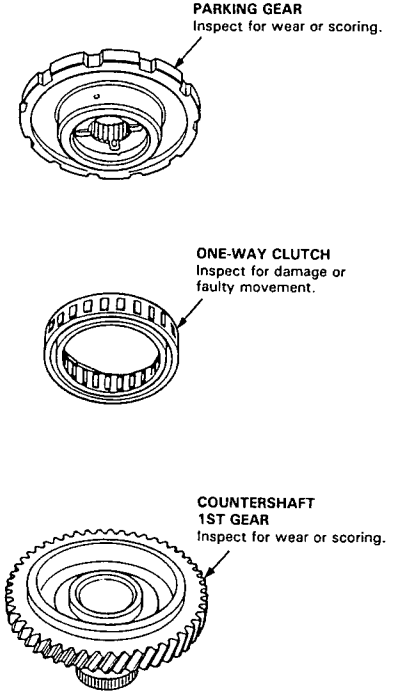

Clutch

Illustrated Index

1ST-HOLD CLUTCH

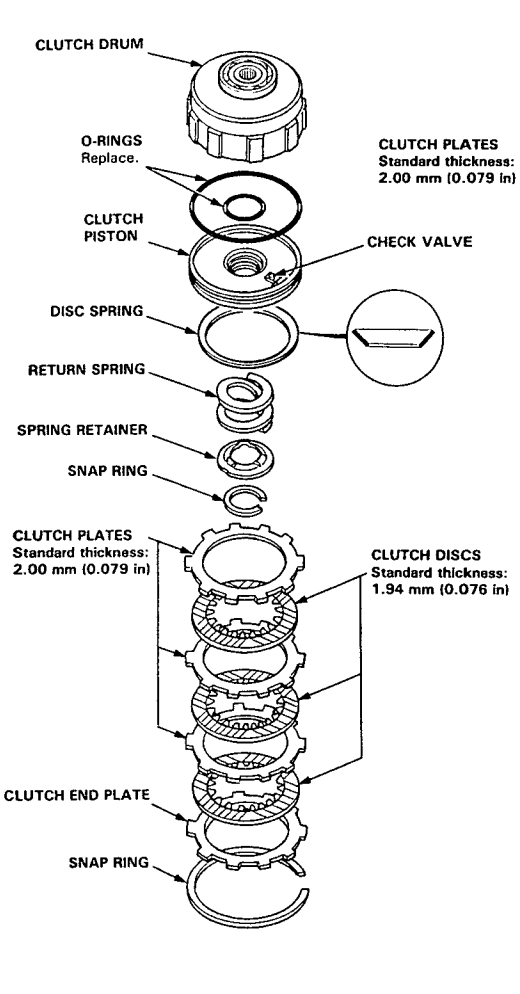

3RD CLUTCH

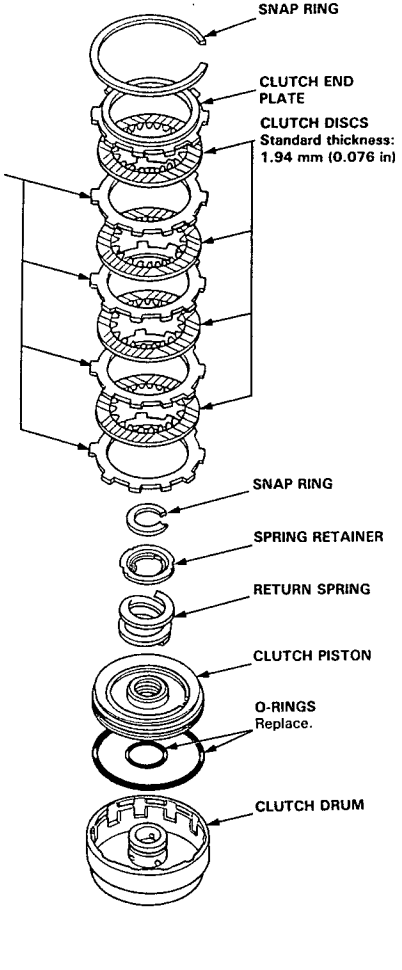

1ST CLUTCH

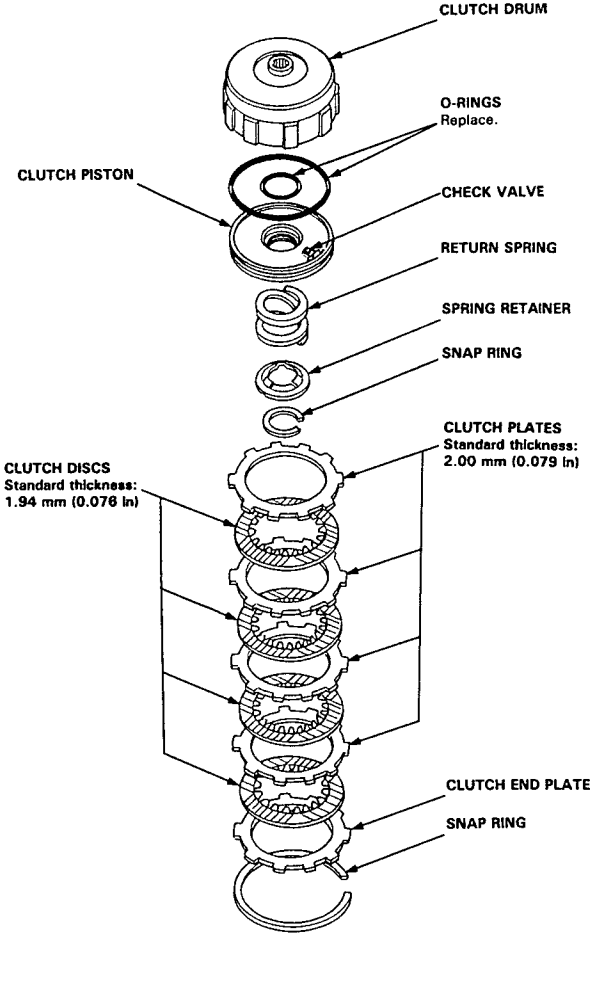

(cont'd)

Clutch

Illustrated Index (cont'd)

4TH/2ND CLUTCH

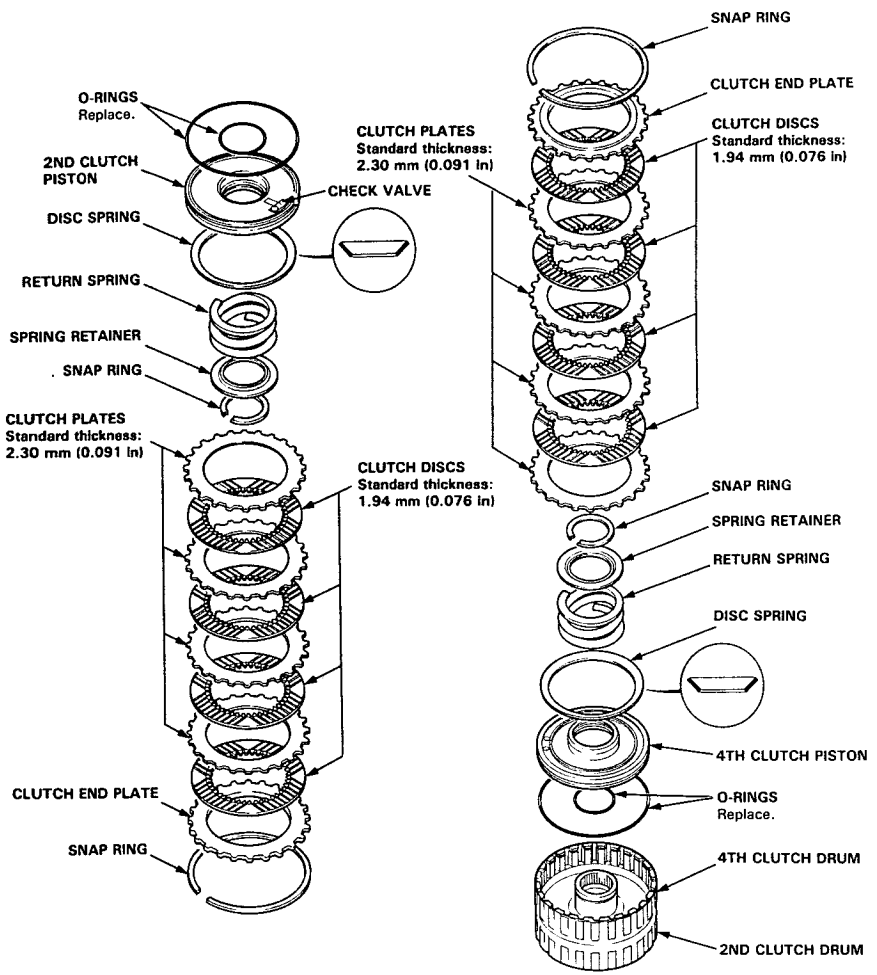

Disassembly

1. Remove the snap ring, then remove the clutch end plate, clutch discs and plates.

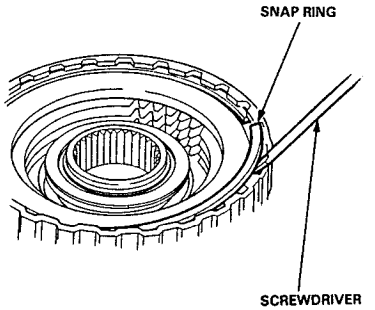

2. Remove the disc spring.

NOTE: For 1st-hold, 2nd and 4th clutches

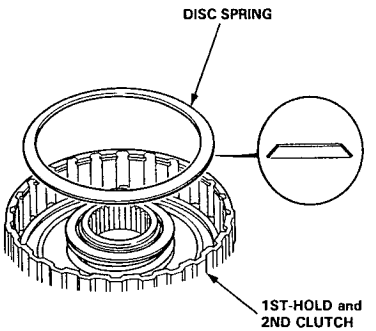

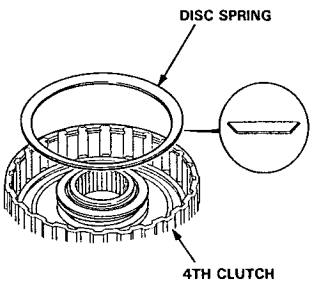

3. Install the special tools as shown.

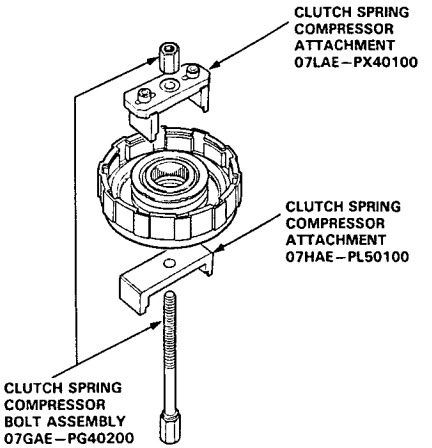

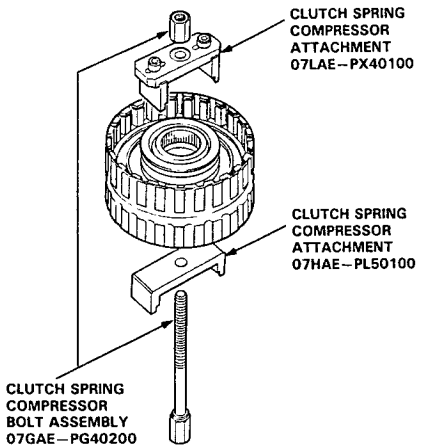

(cont'd)

Clutch

Disassembly (cont'd)

CAUTION: If either end of the compressor attachment is set over an area of the spring retainer which is unsupported by the return spring, the retainer may be damaged.

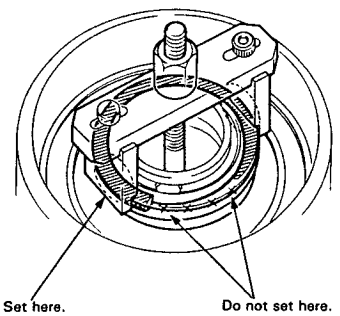

4. Compress the return spring.

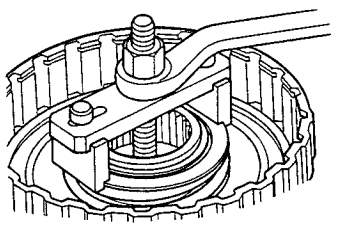

5. Remove the snap ring. Then remove the special tools, spring retainer and return spring.

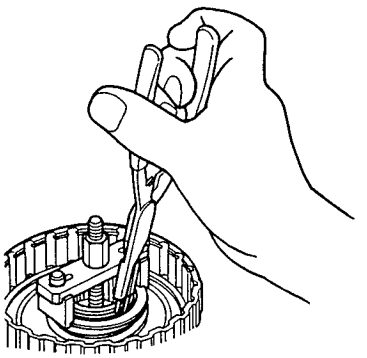

6. Wrap a shop towel around the clutch drum and apply air pressure to the oil passage to remove the piston. Place a finger tip on the other end while applying air pressure.

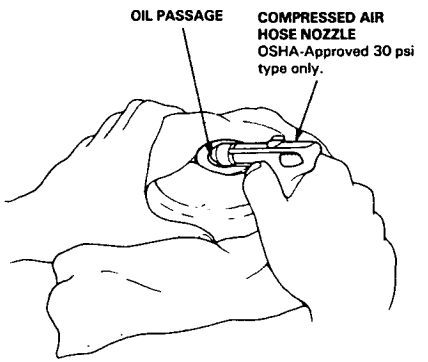

Reassembly

NOTE:
- Clean all parts thoroughly in solvent or carburetor cleaner, and dry with compressed air.
- Blow out all passages.
- Lubricate all parts with ATF before reassembly.

1. Inspect the check valve; if it's loose replace the piston.

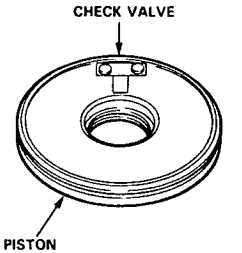

2. Install new O-rings on the clutch piston.

3. Be sure that the disc spring is securely staked.

   NOTE: For 1st and 3rd clutches.

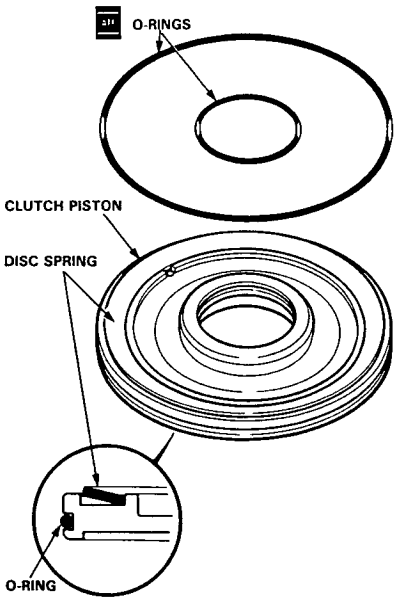

4. Install the piston in the clutch drum. Apply pressure and rotate to ensure proper seating.

   NOTE: Lubricate the piston O-rings with ATF before installing.

   CAUTION: Do not pinch O-ring by installing the piston with force.

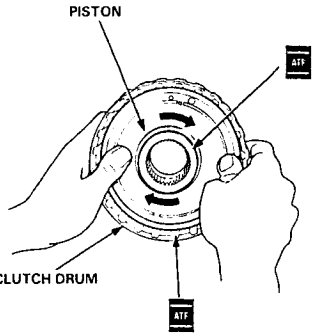

5. Install the return spring and spring retainer and position the snap ring on the spring retainer.

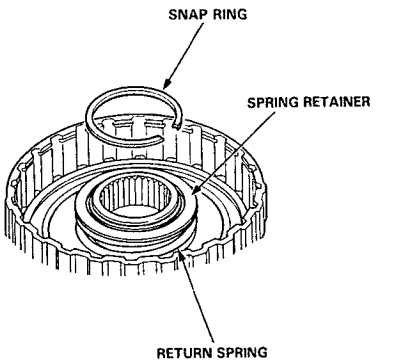

(cont'd)

Reassembly (cont'd)

6. Install the special tools as shown.

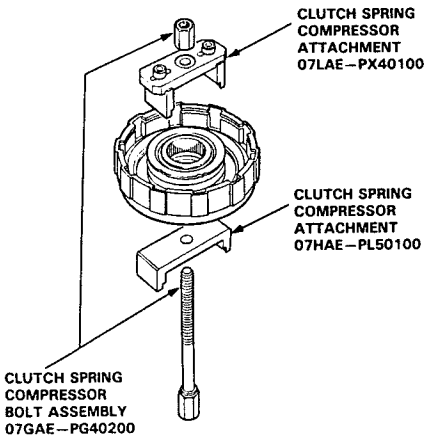

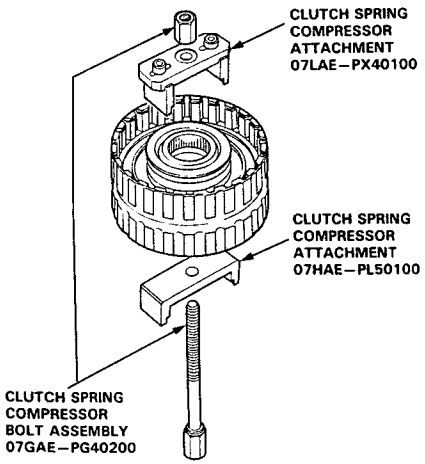

CAUTION: If either end of the compressor attachment is set over an area of the spring retainer which is unsupported by the return spring, the retainer may be damaged.

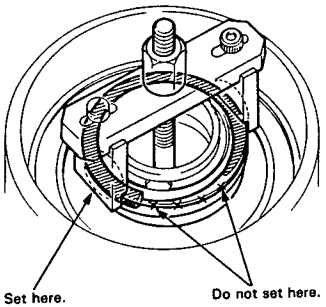

7. Compress the return spring.

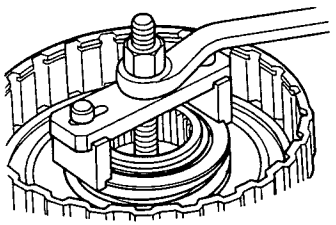

8. Install the snap ring.

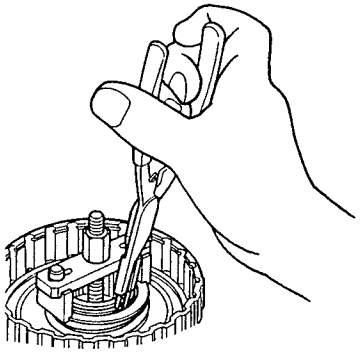

9. Remove the special tools.

10. Install the disc spring.

NOTE:
- For 1st-hold, 2nd and 4th clutches.
- Install the disc spring in the direction shown.

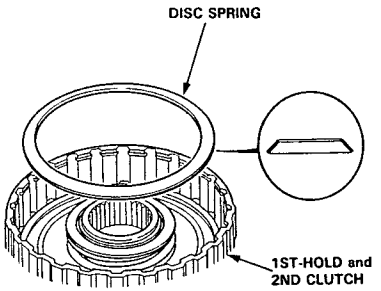

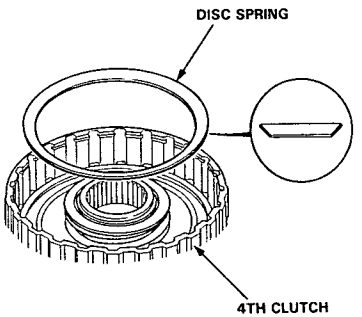

11. Soak the clutch discs thoroughly in ATF for a minimum of 30 minutes.

12. Starting with a clutch plate, alternately install the clutch plates and discs. Install the clutch end plate with flat side toward the disc.

NOTE: Before installing the plates and discs, make sure the inside of the clutch drum is free of dirt or other foreign matter.

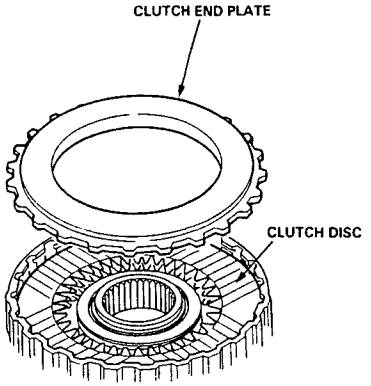

13. Install the snap ring.

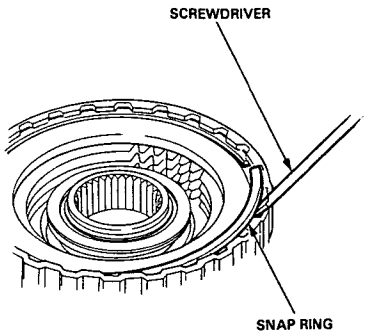

(cont'd)

Clutch

Reassembly (cont'd)

14. Measure the clearance between the clutch end plate and top disc with a dial indicator. Zero the dial indicator with the clutch end plate lowered and lift it up to the snap ring. The distance that the clutch end plate moves is the clearance between the clutch end plate and top disc.

    NOTE: Measure at three locations.

Clutch End Plate-to-Top Disc Clearance:

Clutch	Service Limit
1st	0.65–0.85 mm (0.026–0.033 in)
2nd	0.55–0.75 mm (0.022–0.030 in)
3rd	0.55–0.75 mm (0.022–0.030 in)
4th	0.55–0.75 mm (0.022–0.030 in)
1st-hold	0.80–1.00 mm (0.031–0.039 in)

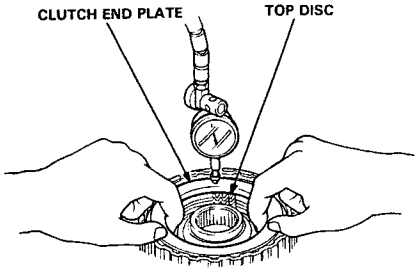

15. If the clearance is not within the service limits, select a new clutch end plate from the following table.

    NOTE: If the thickest clutch end plate is installed but the clearance is still over the standard, replace the clutch discs and clutch plates.

CLUTCH END PLATE

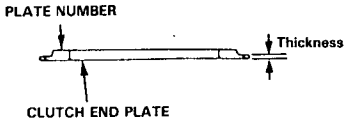

1ST and 1ST-HOLD CLUTCH

Plate No.	Part Number	Thickness mm (in)
1	22551–PF4–000	2.1 (0.083)
2	22552–PF4–000	2.2 (0.087)
3	22553–PF4–000	2.3 (0.091)
4	22554–PF4–000	2.4 (0.094)
5	22555–PF4–000	2.5 (0.098)
6	22556–PF4–000	2.6 (0.102)
7	22557–PF4–000	2.7 (0.106)
8	22558–PF4–000	2.8 (0.110)
9	22559–PF4–000	2.9 (0.114)
10	22560–PF4–000	3.0 (0.118)
11	22561–PF4–000	3.1 (0.122)
12	22562–PF4–000	3.2 (0.126)
13	22563–PF4–000	3.3 (0.130)
14	22564–PF4–000	3.4 (0.134)

2ND and 4TH CLUTCH

Plate No.	Part Number	Thickness mm (in)
1	22631–PR9–000	2.1 (0.083)
2	22632–PR9–000	2.2 (0.087)
3	22633–PR9–000	2.3 (0.091)
4	22634–PR9–000	2.4 (0.094)
5	22635–PR9–000	2.5 (0.098)
6	22636–PR9–000	2.6 (0.102)
7	22637–PR9–000	2.7 (0.106)
8	22638–PR9–000	2.8 (0.110)
9	22639–PR9–000	2.9 (0.114)

3RD CLUTCH

Plate No.	Part Number	Thickness mm (in)
1	22551–PF4–000	2.1 (0.083)
2	22552–PF4–000	2.2 (0.087)
3	22553–PF4–000	2.3 (0.091)
4	22554–PF4–000	2.4 (0.094)
5	22555–PF4–000	2.5 (0.098)
6	22556–PF4–000	2.6 (0.102)
7	22557–PF4–000	2.7 (0.106)
8	22558–PF4–000	2.8 (0.110)
9	22559–PF4–000	2.9 (0.114)
10	22560–PF4–000	3.0 (0.118)

1st-hold Clutch Bearing

Replacement

1. Remove the 1st-hold clutch bearing using a bearing puller.

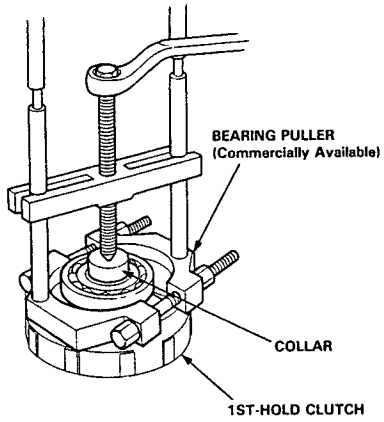

2. Install a new bearing using the special tool as shown.

   NOTE: Drive in the bearing until it fully bottoms.

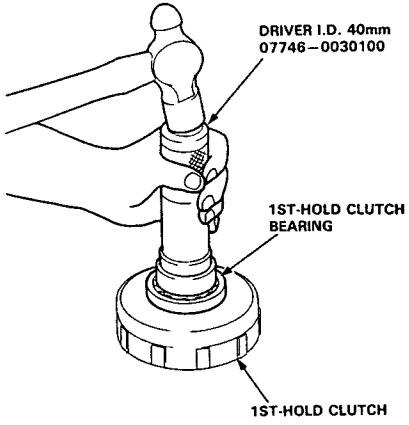

Torque Converter Housing Bearings

Mainshaft Bearing/Oil Seal Replacement

1. Drive out the mainshaft bearing and oil seal using the special tools as shown.

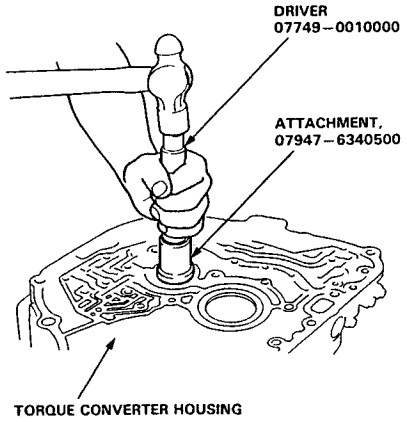

2. Drive in the new mainshaft bearing until it bottoms in the housing, using the special tools as shown.

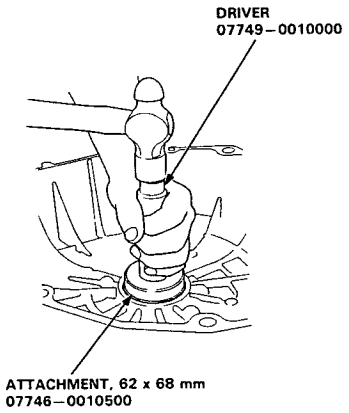

3. Install the new oil seal flush with the housing using the special tools as shown.

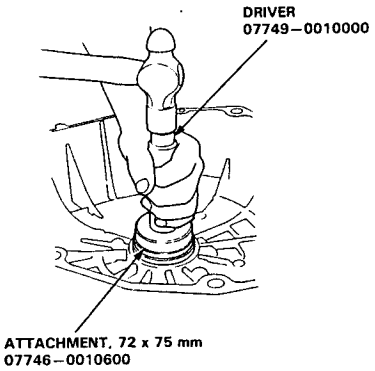

Transmission Housing Bearings

Countershaft Bearing Replacement

1. Remove the countershaft needle bearing using the special tool.

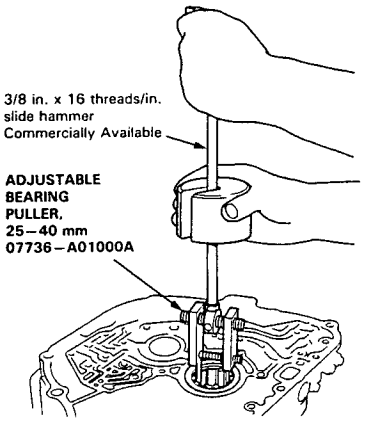

2. Install the oil guide plate.

3. Drive the new bearing into the housing using the special tools as shown.

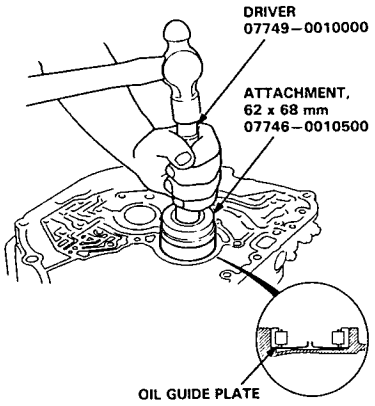

Replacement

1. To remove the mainshaft and countershaft bearings from the transmission housing, expand each snap ring with the snap ring pliers, then push the bearing out.

   NOTE: Do not remove the snap rings unless it's necessary to clean the grooves in the housing.

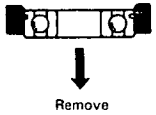

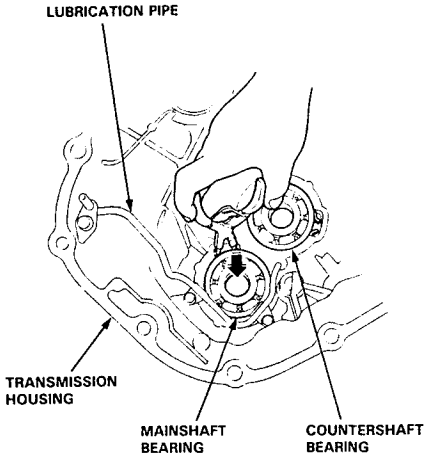

2. Expand each snap ring with the snap ring pliers, insert the new bearing part-way into it, then release the pliers. Push the bearing down into the transmission until the ring snaps in place around it.

   NOTE: Install with groove side of the bearing facing inside the transmission housing.

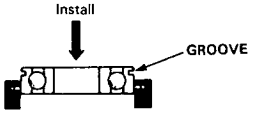

Extension Shaft

Disassembly

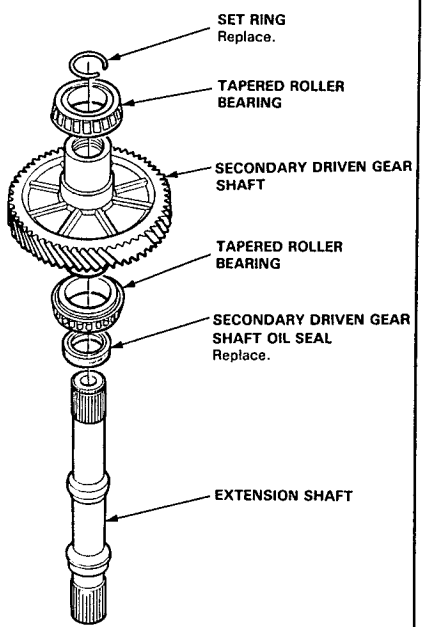

1. Remove the set ring.
2. Remove the extension shaft from the secondary driven gear shaft.

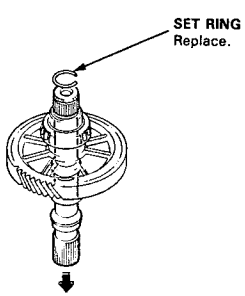

Secondary Driven Gear Shaft Oil Seal

Replacement

1. Remove the oil seal from the secondary driven gear shaft.

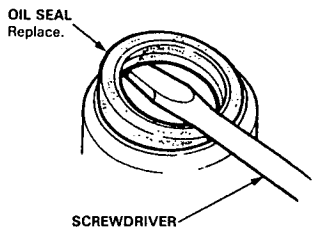

2. Drive the oil seal into the secondary driven gear shaft, using the special tools as shown.

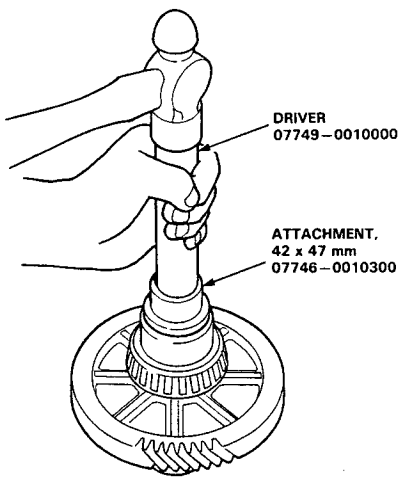

Tapered Roller Bearing

Replacement

NOTE:
- The bearing and outer race should be replaced as a set.
- If the bearing is replaced, inspect and adjust the bearing preload (page 14-158).

1. Remove the tapered roller bearings from the secondary driven gear shaft, using a press.

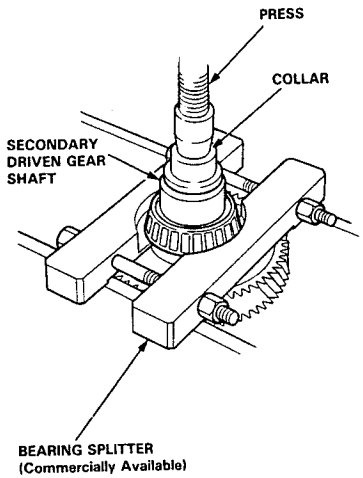

2. Install the bearings using the special tool and a press as shown.

NOTE: Press the bearings in squarely until they bottom.

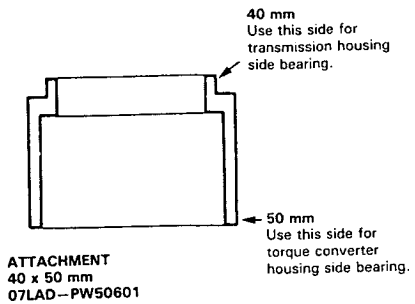

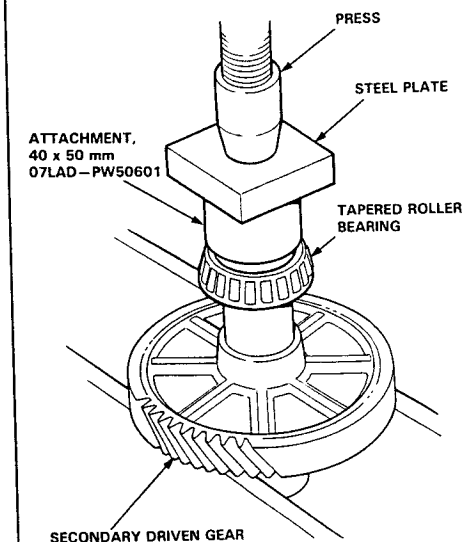

Oil Seal

Removal

1. Remove the oil seal from the transmission housing.

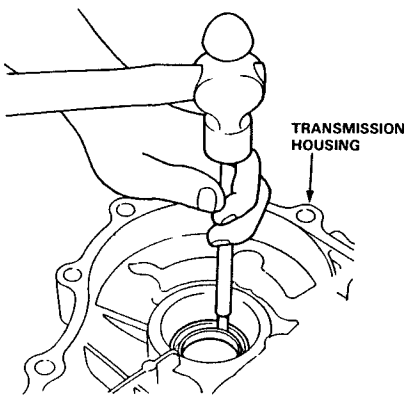

2. Remove the snap ring from the torque converter housing, then remove the oil seal.

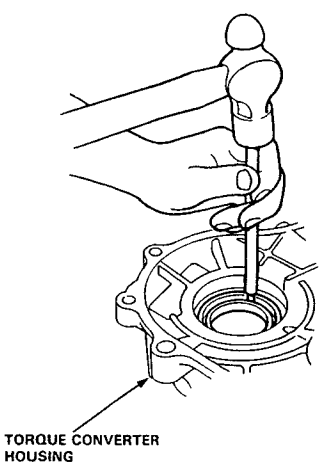

Bearing Outer Race

Replacement

NOTE:
- The bearing and outer race should be replaced as a set.
- If the bearings and/or thrust shim are replaced, inspect and adjust the bearing preload (page 14-158).

1. Remove the bearing outer race by heating the housings to 212°F (100°C) with a heat gun, then tap the housing until the bearing outer race falls out.

   CAUTION: Do not heat the housings in excess of 212°F (100°C).

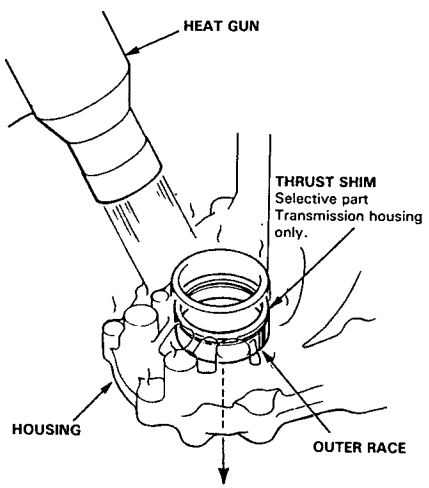

2. Install the thrust shim and bearing outer race in the transmission housing.

3. Drive the bearing outer race into the transmission housing, using the special tools as shown.

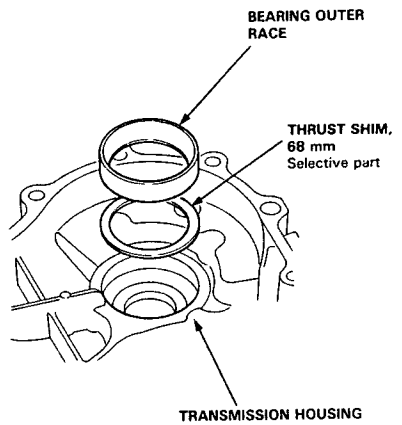

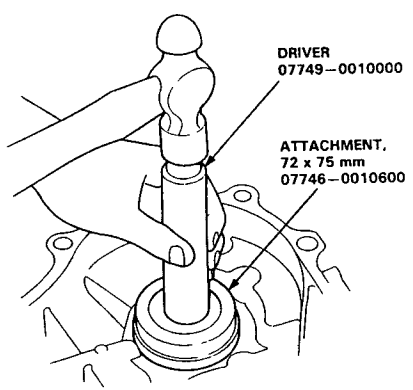

4. Install bearing outer race in the torque converter housing.

5. Drive the bearing outer race into the torque converter housing, using the special tools as shown.

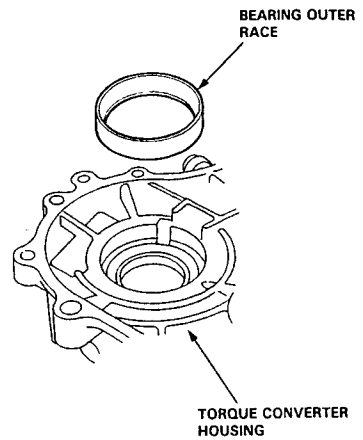

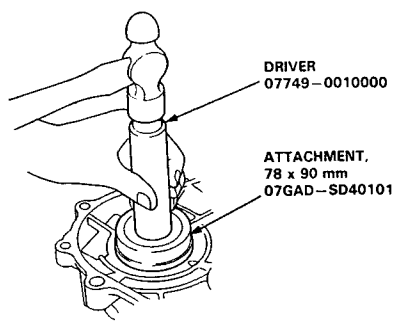

Tapered Roller Bearing Preload

Adjustment

NOTE:
- If any of the listed parts were replaced, the bearing preload must be adjusted:
  - Transmission Housing
  - Torque Converter Housing
  - Tapered Roller Bearing/Bearing Outer Race
  - 68 mm Thrust Shim

CAUTION: If the outer race was removed using heat, let the transmission cool down to room temperature before adjusting the bearing preload.

1. Remove the oil seals from both housings.

2. Install the sealing bolt to the secondary driven gear shaft and torque to 20 N·m (2.0 kg-m, 14 lb-ft).

3. Install the secondary driven gear in the torque converter housing, then install the transmission housing.

   NOTE: Do not install the mainshaft and countershaft.

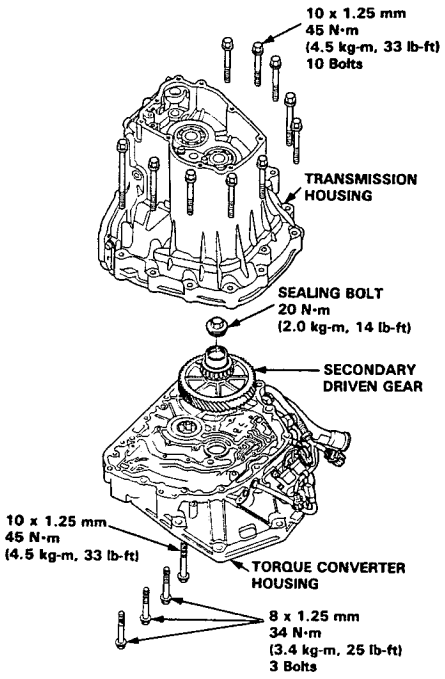

4. Rotate the secondary driven gear in both directions to seat the bearings.

5. Measure the starting torque of the secondary driven gear with a torque wrench.

NOTE:
- Measure the preload at room temperature in both directions.
- Do not use more than one thrust shim to adjust the bearing preload.

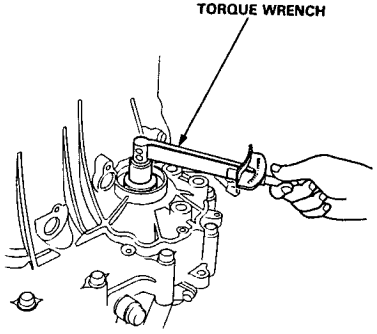

6. If the bearing preload is out of tolerance, select and install a new thrust shim then recheck.

THRUST SHIM 68 mm

No.	Part Number	Thickness mm (in)
A	23941–PW5–000	1.56 (0.061)
B	23942–PW5–000	1.59 (0.063)
C	23943–PW5–000	1.62 (0.064)
D	23944–PW5–000	1.65 (0.065)
E	23945–PW5–000	1.68 (0.066)
F	23946–PW5–000	1.71 (0.067)
G	23947–PW5–000	1.74 (0.069)
H	23948–PW5–000	1.77 (0.070)
I	23949–PW5–000	1.80 (0.071)
J	23950–PW5–000	1.83 (0.072)
K	23951–PW5–000	1.86 (0.073)
L	23952–PW5–000	1.89 (0.074)
M	23953–PW5–000	1.92 (0.076)
N	23954–PW5–000	1.95 (0.077)
O	23955–PW5–000	1.98 (0.078)
P	23956–PW5–000	2.01 (0.079)
Q	23957–PW5–000	2.04 (0.080)
R	23958–PW5–000	2.07 (0.081)
S	23959–PW5–000	2.10 (0.083)
T	23960–PW5–000	2.13 (0.084)
U	23961–PW5–000	2.16 (0.085)
V	23962–PW5–000	2.19 (0.086)
W	23963–PW5–000	2.22 (0.087)
X	23964–PW5–000	2.25 (0.089)
Y	23965–PW5–000	2.28 (0.090)
Z	23966–PW5–000	2.31 (0.091)
AA	23967–PW5–000	2.34 (0.092)
AB	23968–PW5–000	2.37 (0.093)
AC	23969–PW5–000	2.40 (0.094)
AD	23970–PW5–000	2.43 (0.096)

Oil Seal

Installation

1. Install the oil seal into the transmission housing, using the special tool.

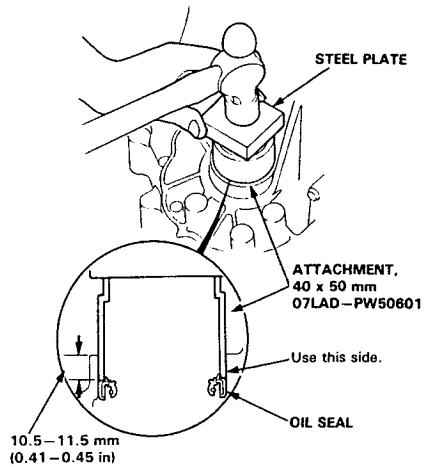

2. Install the oil seal into the torque converter housing, using the special tools as shown.

3. Install the snap ring in the torque converter housing.

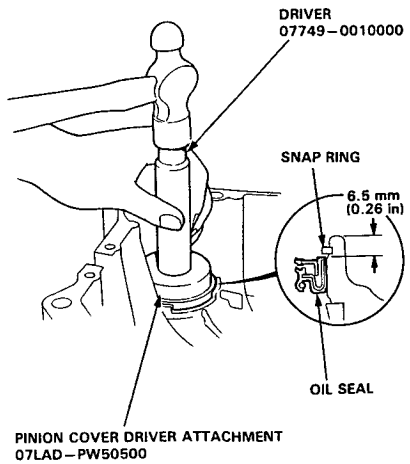

Reverse Idler Gear

Installation

1. Set the spring in the reverse idler gear shaft. Push the spring in with the steel ball then install the needle bearing.

   NOTE: The steel ball is under spring pressure. Take care not to let it pop out.

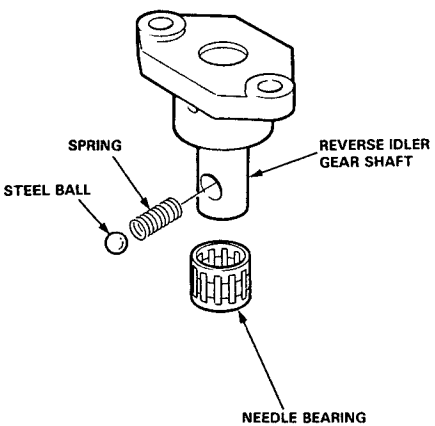

2. Install the reverse idler gear.

3. Install the reverse idler gear shaft holder in the transmission housing, then tighten the bolts.

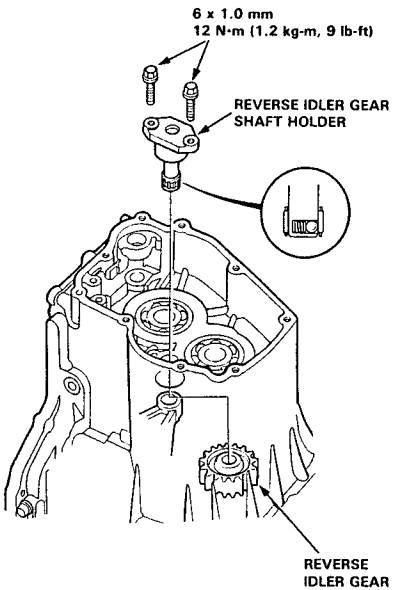

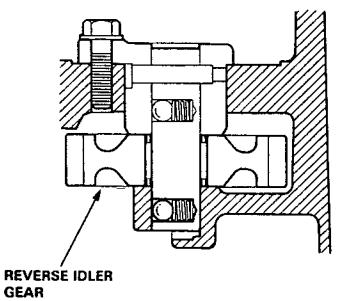

Parking Brake Roller Rod

Adjustment

1. Move the detent lever to the [P] position.

2. Measure the clearance between the parking brake roller rod and the transmission housing as shown.

   STANDARD: 4.0–4.5 mm (0.157–0.177 in)

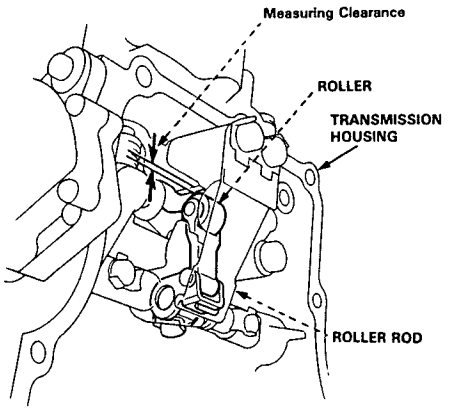

3. If the clearance is out of tolerance, select and install a new parking brake roller rod.

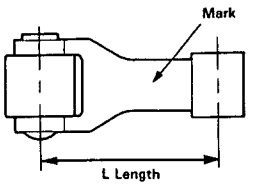

PARKING BRAKE ROLLER ROD

Mark	Part Number	Length "L"
1 or None	24550-PW7-010	36.0 mm (1.42 in)
2	24560-PW7-010	35.6 mm (1.40 in)
3	24580-PW7-010	36.4 mm (1.43 in)

4. After replacing the parking brake roller rod, make sure that the clearance is within tolerance.

Control Shaft/Detent Spring

Disassembly

NOTE: It is necessary to disassemble that the control shaft and/or detent spring maintenance is required.

1. Remove the two special bolts, lock washer, detent spring plate and detent spring.
2. Remove the special bolt securing the parking brake roller guide then remove the parking brake roller guide with two dowel pins from the transmission housing.
3. Remove the three lock bolts with lock washers from the control shaft.
4. Pull the control shaft and remove the detent lever, shift arm roller, parking brake stopper, parking brake shift arm, parking brake roller rod, parking brake shift arm spring and control shaft collar.

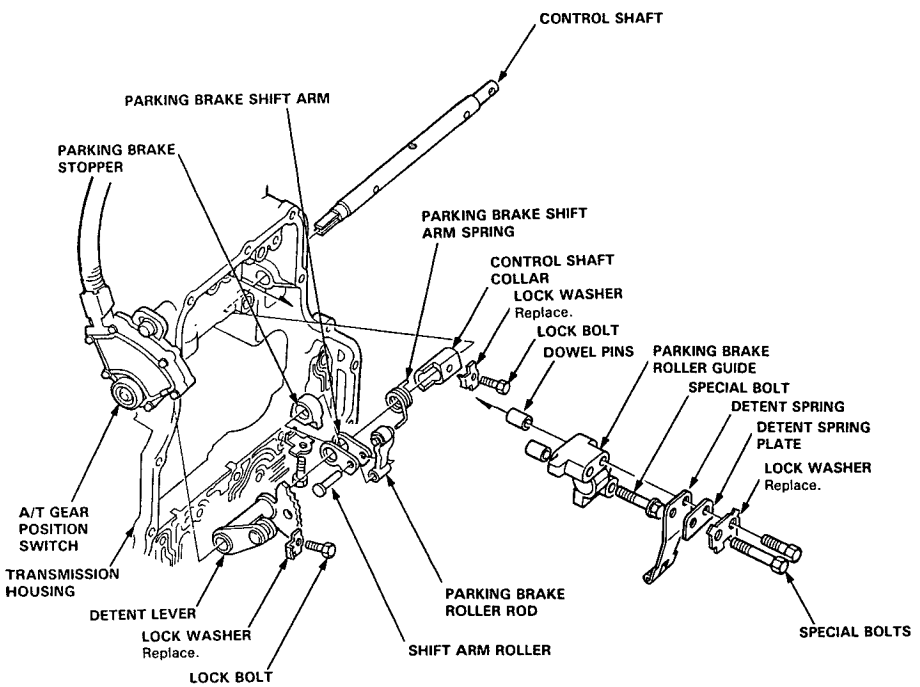

Reassembly

NOTE:
- Coat all parts with ATF.
- Replace the lock washers.

1. Insert the control shaft into the torque converter housing, and install the control shaft collar and parking brake shift arm spring on the control shaft.
2. Set the parking brake shift arm with the parking brake stopper then insert the control shaft into the hole of the parking brake shift arm/parking brake stopper assembly.
3. Install the parking brake roller rod with the shift arm roller on the parking brake shift arm, then install the detent lever on the control shaft.

   CAUTION:
   - **Install the parking brake roller rod with the rivets facing the detent lever.**
   - **Install the shift arm roller with its flange side facing the detent lever.**

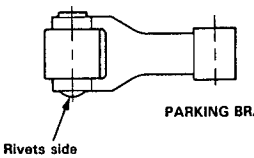

4. Align the cutout of the control shaft with the A/T gear position switch, then insert the control shaft in the A/T gear position switch.
5. Install the lock bolts with new lock washers on the control shaft, and tighten the bolts. Then bend the lock washers against the bolt head.
6. Move the detent lever to other than [P] position.

   CAUTION: If the detent lever is in [P] position when installing the detent spring; you may damage the parking brake roller guide.
7. Install the parking brake roller guide on the transmission housing with the two dowel pins and the special bolt.
8. Install the detent spring, detent spring plate, lock washer and the two special bolts.
9. Tighten the bolts then bend the lock washer.

   TORQUE: 30 N·m (3.0 kg-m, 22 lb-ft)

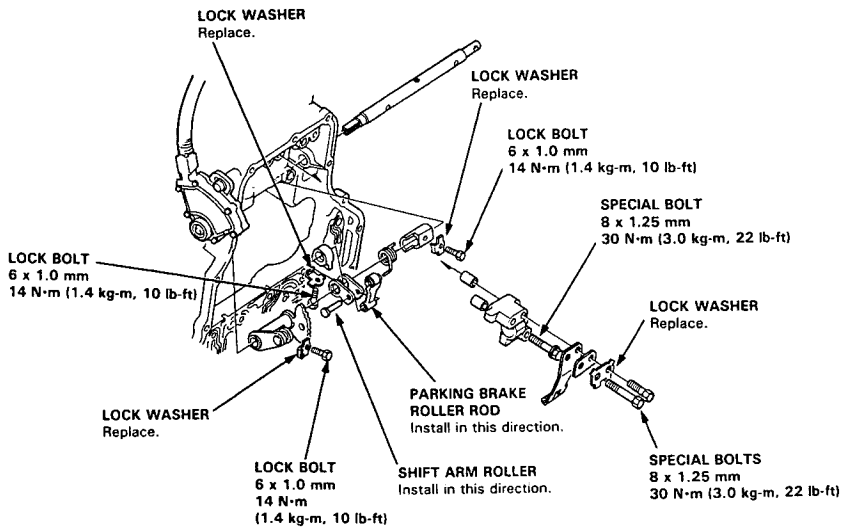

Reassembly

NOTE:
- Coat all parts with ATF.
- Replace parts below:
  - O-rings
  - Lock washers
  - Gaskets
  - Mainshaft and countershaft locknuts and disc springs
  - Sealing washers

TORQUE:
- **6 x 1.0 mm Bolts: 12 N·m (1.2 kg-m, 9 lb-ft)**
- **8 x 1.25 mm Bolts: 18 N·m (1.8 kg-m, 13 lb-ft)**
- **5 x 0.8 mm Flange nuts: 6 N·m (0.6 kg-m, 4 lb-ft)**

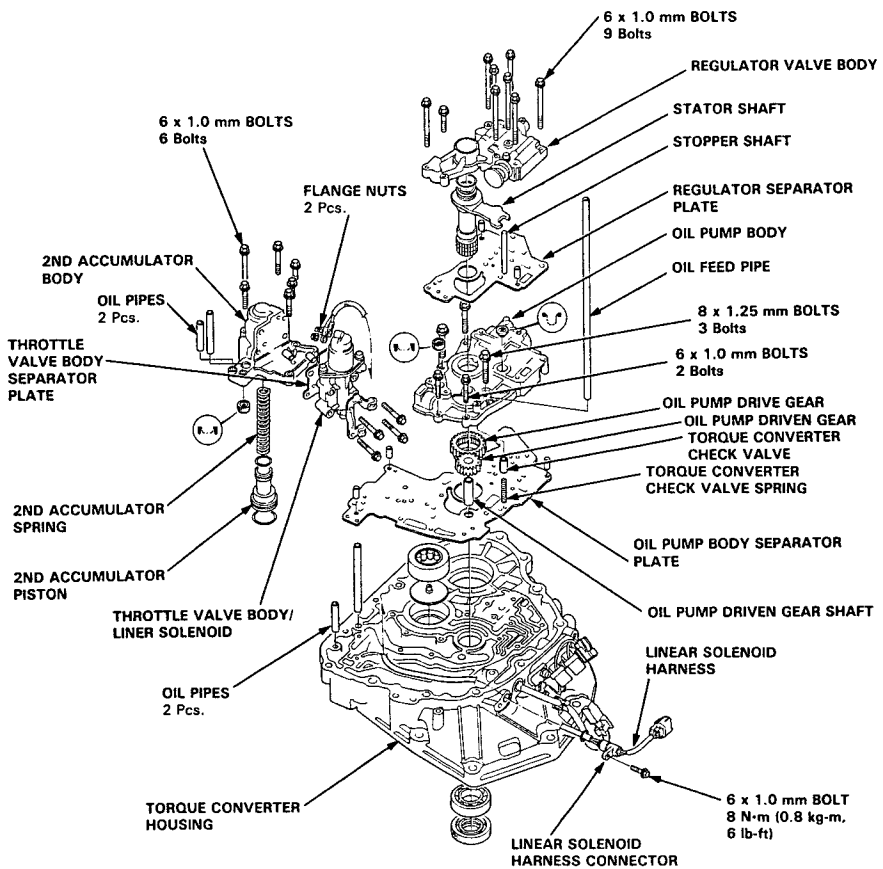

1. Install the linear solenoid harness and linear solenoid harness connector into the torque converter housing.

2. Install the oil pump body separator plate with three dowel pins on the torque converter housing.

   CAUTION: Take care not to pinch the linear solenoid harness.

3. Install the oil pump drive gear, oil pump driven gear, oil pump driven gear shaft, torque converter check valve, and spring on the torque converter housing.

   NOTE: Install the oil pump driven gear with its grooved and chamfered side facing down.

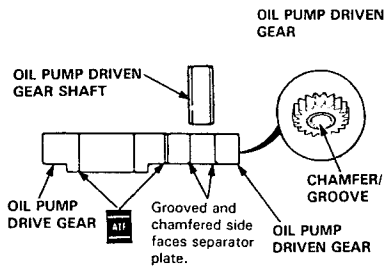

4. Install the oil pump body with three 8 mm bolts and two 6 mm bolts. Make sure the oil pump drive gear rotates smoothly in the normal operating direction and the oil pump driven gear shaft moves smoothly in the axial and normal operating directions.

5. If the oil pump drive gear and oil pump driven gear shaft do not move freely, loosen the oil pump body bolts, realign the oil pump driven gear shaft, and then retighten to the specified torque.

   CAUTION: Failure to align the oil pump driven gear shaft correctly will result in seized oil pump gears and oil pump driven gear shaft.

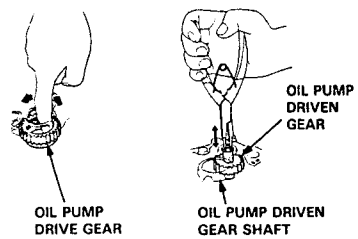

6. Install the throttle valve body/linear solenoid on the 2nd accumulator body with two dowel pins, throttle valve body separator plate, harness clamp and four bolts.

7. Install the 2nd accumulator piston and 2nd accumulator spring in the 2nd accumulator body, then install the 2nd accumulator body on the torque converter housing with six bolts.

8. Install the regulator separtor plate on the oil pump body with two dowel pins.

9. Install the stator shaft with a new O-ring and stopper shaft.

10. Install the regulator valve body with nine bolts.

11. Connect the linear solenoid harness to the linear solenoid terminal, then tighten the flange nuts to 6 N·m (0.6 kg-m, 4 lb-ft).

12. Tighten the linear solenoid harness connector bolt to 8 N·m (0.8 kg-m, 6 lb-ft).

13. Install the oil feed pipe in the oil pump body, two oil pipes in the torque converter housing, and two oil pipes in the 2nd accumulator body.

(cont'd)

Reassembly (cont'd)

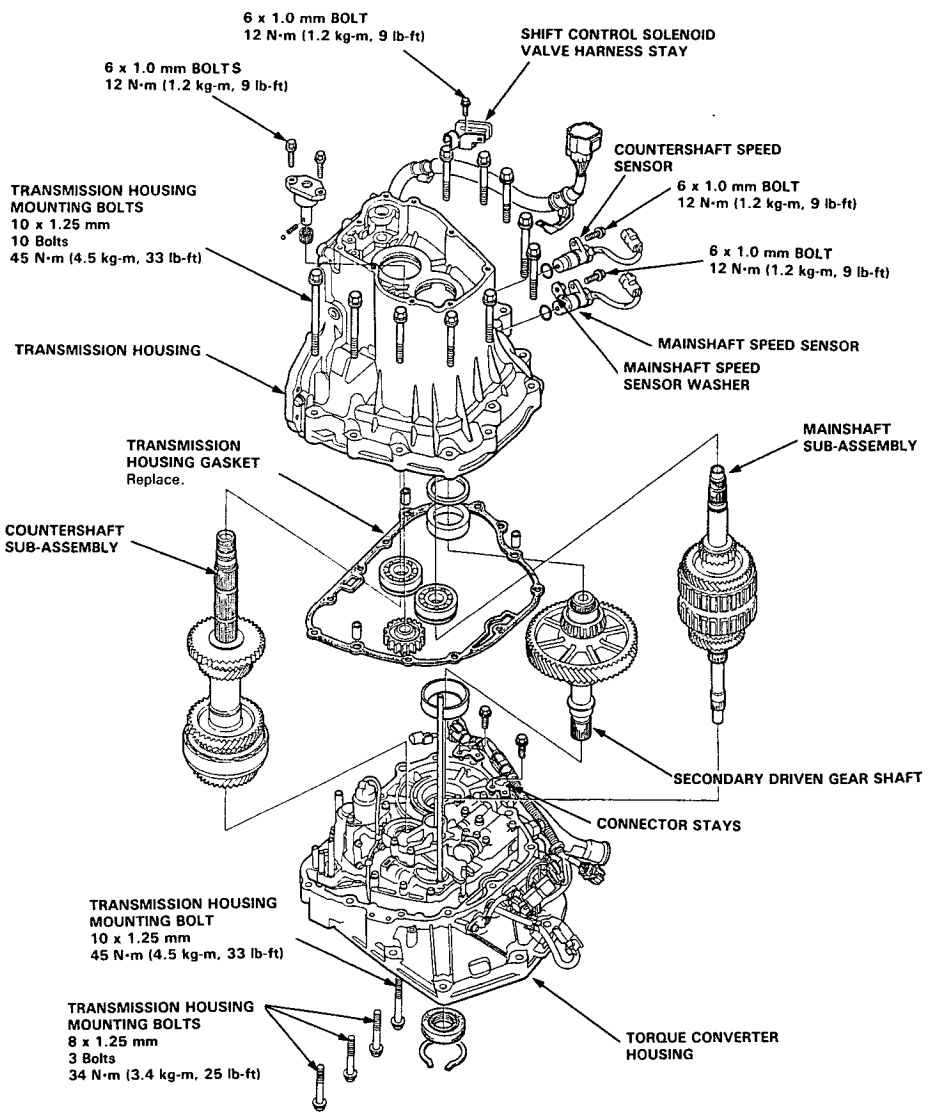

14. Install the reverse idler gear and reverse idler gear shaft holder in the transmission housing (see page 14-160).

15. Install the secondary driven gear shaft in the torque converter housing.

16. Install the mainshaft sub-assembly and countershaft sub-assembly together in the torque converter housing.

17. Install three dowel pins and a new gasket on the torque converter housing.

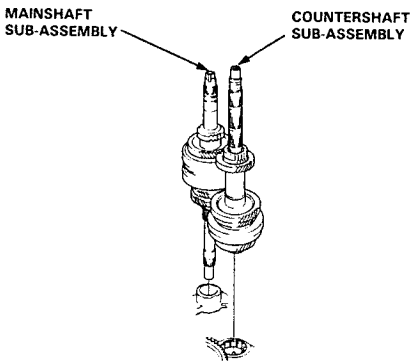

18. Place the transmission housing on the torque converter housing.

CAUTION: Make sure that the mainshaft and countershaft speed sensors are not installed on the transmission housing before installing the transmission housing on the torque converter housing.

19. Install the ten transmission housing bolts and tighten to the 45 N·m (4.5 kg-m, 33 lb-ft) in two or more steps in the pattern as shown.

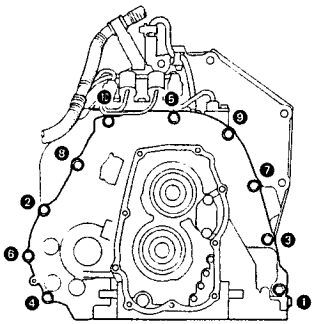

20. Install the 10 mm bolt and three 8 mm bolts to the transmission housing from the torque converter housing to specified torque.

TORQUE:
10 mm Bolt 45 N·m (4.5 kg-m, 33 lb-ft)
8 mm Bolts 34 N·m (3.4 kg-m, 25 lb-ft)

21. Install the mainshaft speed sensor with the mainshaft speed sensor washer and the countershaft speed sensor in the transmission housing.

NOTE: Countershaft speed sensor does not have a washer.

(cont'd)

Reassembly (cont'd)

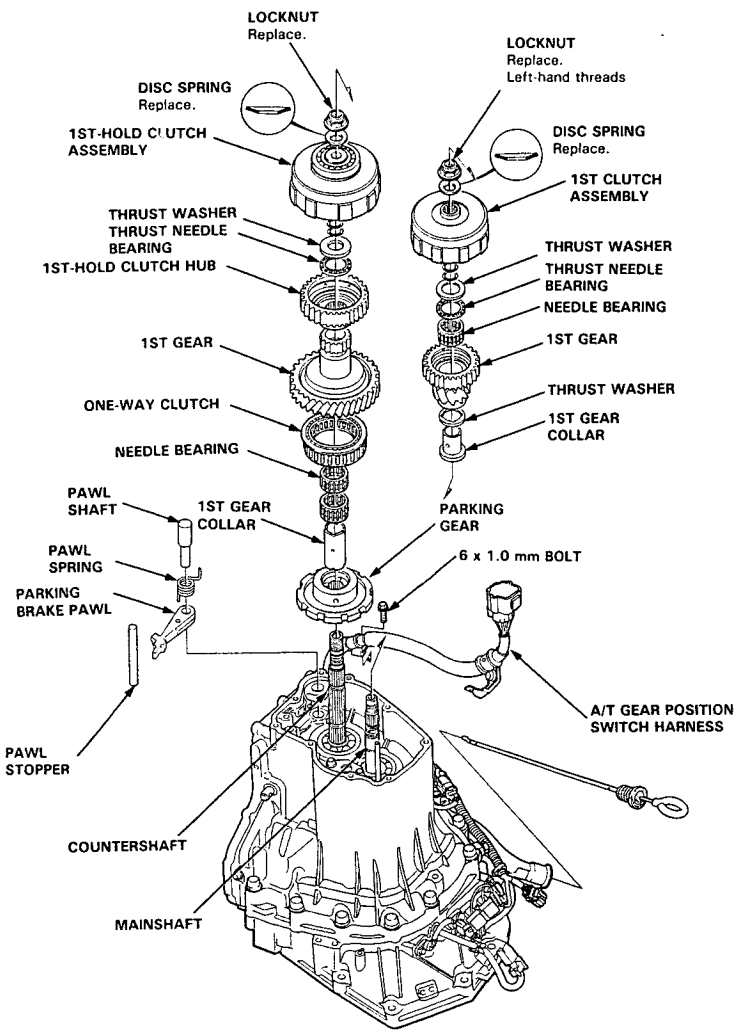

22. Install the mainshaft 1st gear collar and thrust washer on the mainshaft.

23. Install the parking gear, countershaft 1st gear collar and needle bearings on the countershaft.

24. Assemble the one-way in countershaft 1st gear, then install them on the countershaft.

25. Install new O-rings on the mainshaft and countershaft.

    NOTE: Before installing the O-rings, wrap the shaft splines with tape to prevent damage to the O-rings.

26. Install the thrust washer, thrust needle bearing, needle bearing and mainshaft 1st gear in the 1st clutch assembly, then install them on the mainshaft.

27. Install the thrust washer, thrust needle bearing and 1st-hold clutch hub in the 1st-hold clutch assembly, then install them on the countershaft.

28. Install the parking brake pawl and spring on the transmission housing. Align the holes of the pawl and spring with the transmission housing, then install the parking brake pawl shaft. And install the parking brake pawl stopper.

29. Install the special tool onto the mainshaft as shown, then engage the parking brake pawl with the parking gear.

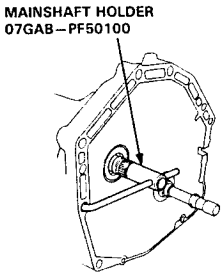

30. Install new locknuts with disc springs on the mainshaft and countershaft.

    NOTE:
    - Install the disc spring so that the stamp side on it faces the locknut as shown.
    - Coat the disc springs with ATF before installing them.

31. Tighten the locknuts to specified torque.

    TORQUE: 140 N·m (14.0 kg-m, 101 lb-ft)

    NOTE: Mainshaft locknut has left-hand threads.

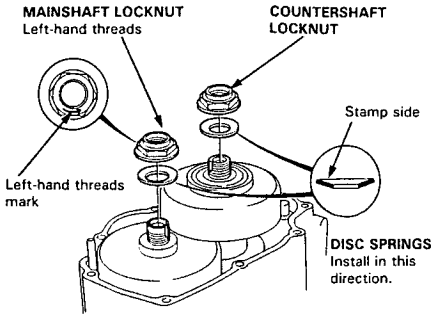

32. Stake each locknut into its shaft using a 3.5 mm (0.14 in) punch.

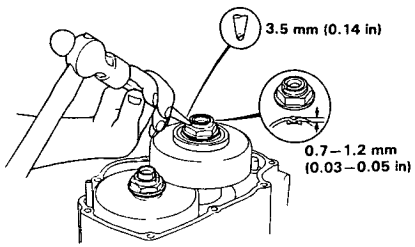

(cont'd)

Reassembly (cont'd)

33. Assemble the lower valve body assembly (see page 14-122).

34. Shift the control shaft to [P] position by turning the detent lever.

35. Push the shift fork on the lower valve body assembly to drive position in the direction as shown.

36. Pass the shift control solenoid valve harness through the transmission housing, and put the manual valve and detent lever together. Then put the shift fork and reverse selector together before installing the lower valve body.

37. Install the lower valve body assembly with two dowel pins and eight bolts in the transmission housing.

    TORQUE: 12 N·m (1.2 kg-m, 9 lb-ft)

38. Install the main valve body plate on the lower valve body assembly with four bolts.

    TORQUE: 12 N·m (1.2 kg-m, 9 lb-ft)

39. Install the shift control solenoid valve harness connector with the bolt.

    TORQUE: 8 N·m (0.8 kg-m, 6 lb-ft)

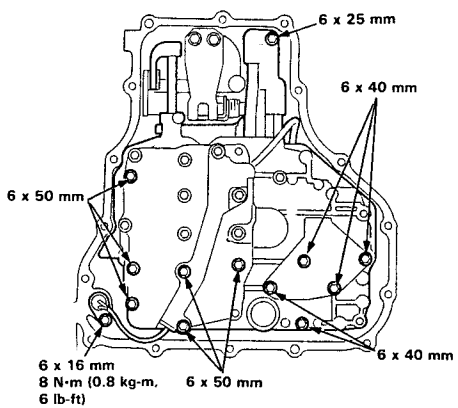

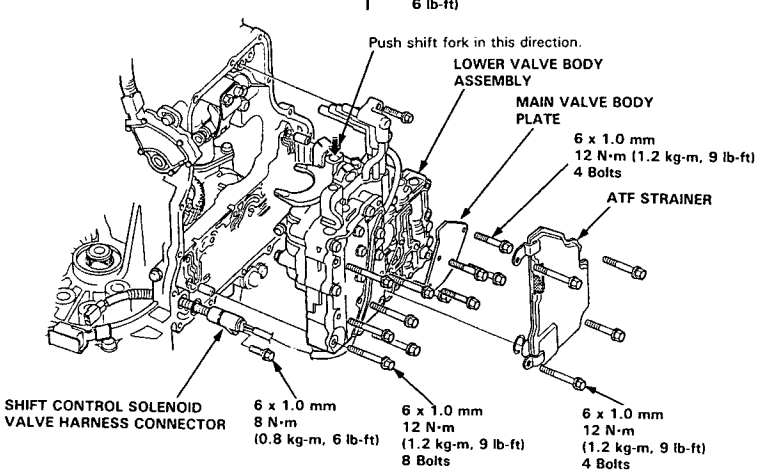

40. Install the ATF strainer on the lower valve body assembly with four bolts.

    TORQUE: 12 N·m (1.2 kg-m, 9 lb-ft)

41. Lightly pull the shift control solenoid valve harness from the harness cover, then bring the shift control solenoid valve harness back. Make sure that the shift control solenoid valve harness is not pinched. If the shift control solenoid valve harness is pinched, loosen four bolts securing the harness cover then retighten the bolts.

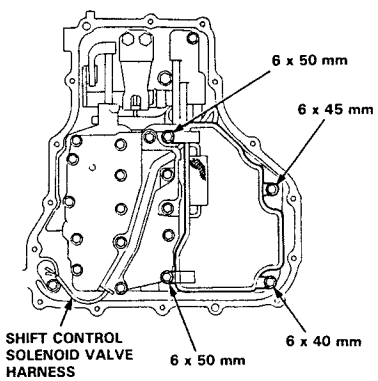

42. Install the oil pan with new oil pan gasket, two dowel pins and eight bolts on the transmission housing.

    TORQUE: 12 N·m (1.2 kg-m, 9 lb-ft)

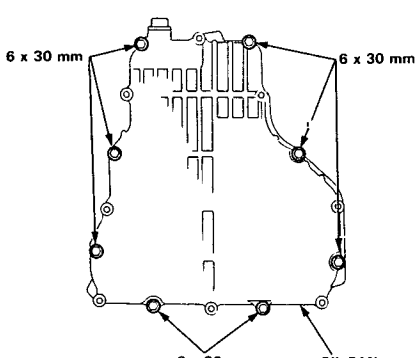

43. Install four oil pipes in the transmission housing.

44. Install the rear cover with new rear cover gasket, two dowel pins and nine bolts on the transmission housing.

    TORQUE: 12 N·m (1.2 kg-m, 9 lb-ft)

45. Install the A/T gear position switch harness clamp then tighten the bolt.

    TORQUE: 12 N·m (1.2 kg-m, 9 lb-ft)

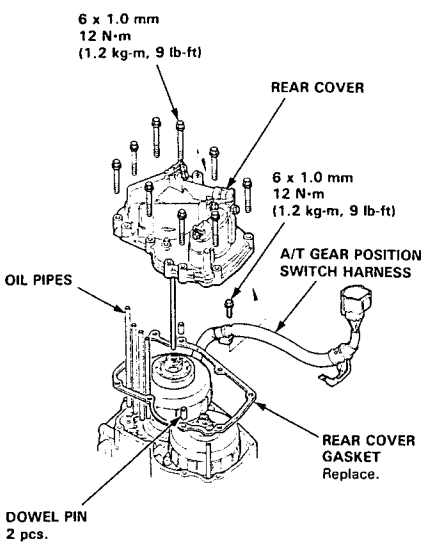

46. Install the ATF cooler pipes with new sealing washers and tighten the joint bolts.

    TORQUE: 29 N·m (2.9 kg-m, 21 lb-ft)

47. Install the ATF level gauge pipe with new O-ring and the bolt.

    TORQUE: 12 N·m (1.2 kg-m, 9 lb-ft)

48. Install the connector stays with the bolts, then connect the shift control solenoid valve connector, mainshaft speed sensor connector, countershaft speed sensor connector and linear solenoid connector to the transmission sub-harness securely.

Torque Converter

Disassembly

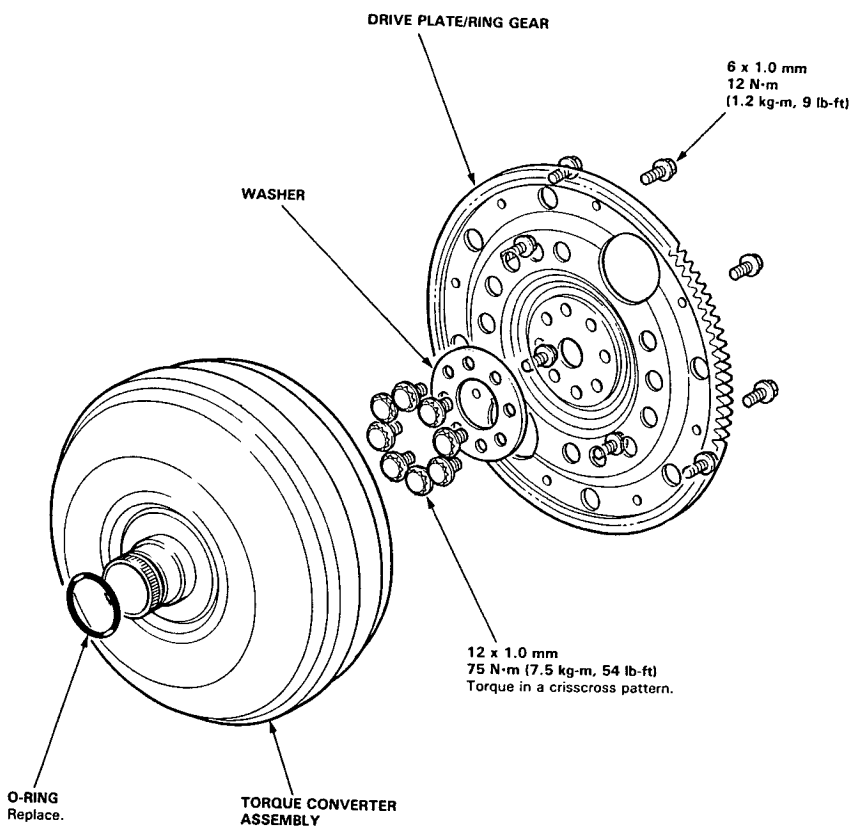

Transmission

Installation

1. Flush the ATF cooler as described on pages 14-178 and 179.
2. Install the torque converter with a new O-ring and two 14 x 20 mm dowel pins in the torque converter housing.

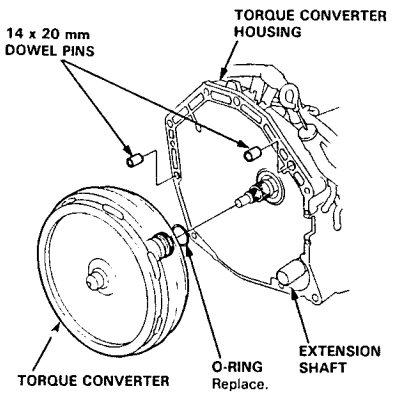

3. Set the extension shaft, apply Super High Temp Urea Grease (P/N 08798–9002) to the shaft splines.
4. Fill the opening of the drive pinion and extension shaft with Super High Temp Urea Grease (P/N 08798–9002), as shown.

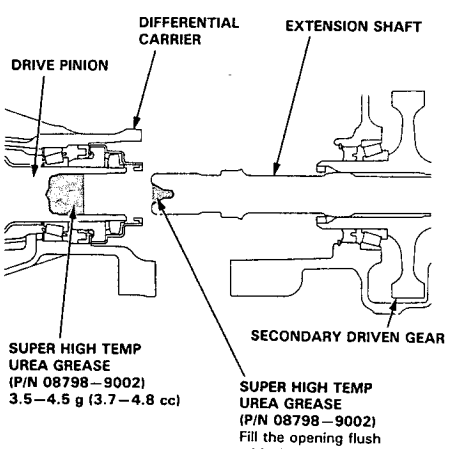

5. Place the transmission on a transmission jack, and raise to the engine level.
6. Install the transmission housing mounting bolts.
7. Install the torque converter cover mounting bolt on the torque converter housing side.

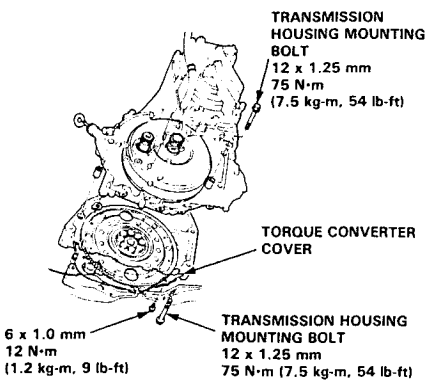

8. Install the mid mount spacer and mid mounts.
9. Install the mid mount nuts.

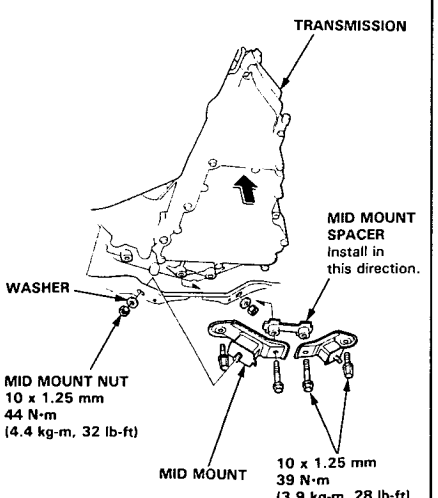

(cont'd)

Installation (cont'd)

10. Install the transmission housing mounting bolts and 26 mm shim.

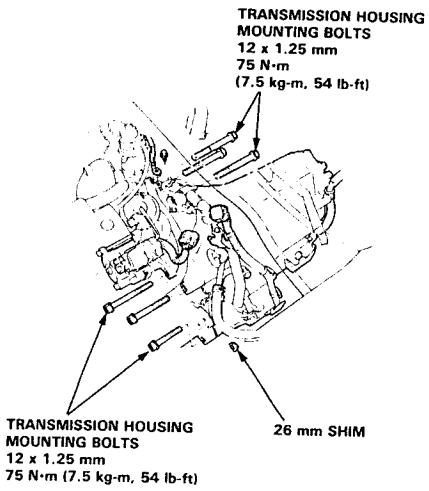

11. Install a new set ring in the extension shaft groove.

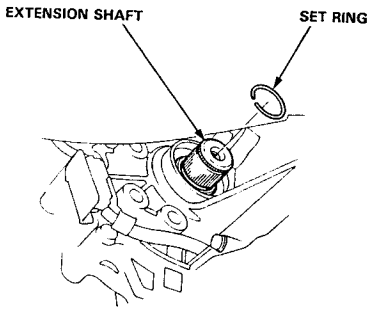

12. Fill the opening of the extension shaft and 33 mm sealing bolt with Super High Temp Urea Grease (P/N 08798–9002), as shown.

13. Apply liquid gasket (P/N 08718–0001) to the 33 mm sealing bolt threads.

14. Install the extension shaft.

15. Shift to [P] position by rotating the control shaft.

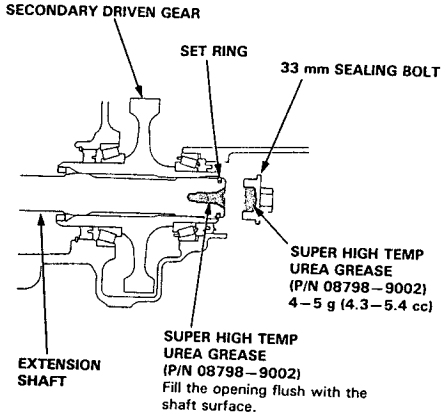

16. Install the 33 mm sealing bolt and secondary cover on the transmission housing.

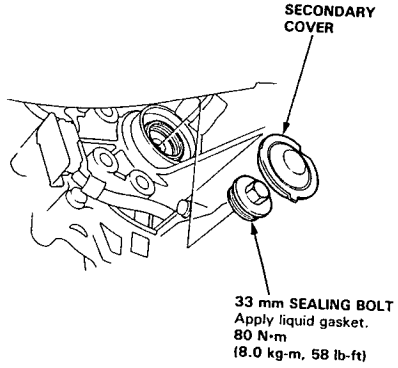

17. Connect the ATF cooler hoses to the joint pipes.

NOTE: Flush the ATF cooler before connecting the cooler hoses.

18. Install the transmission mount bracket and mount.

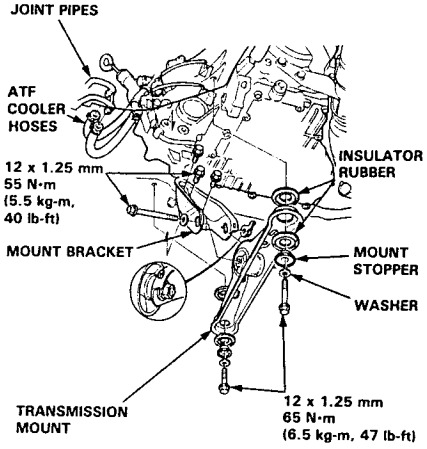

19. Install the A/T gear position switch harness stay, then connect the A/T gear position switch connector.

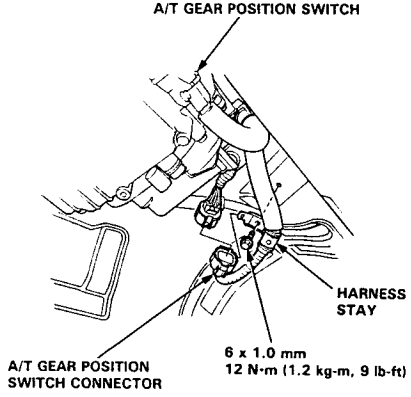

20. Install the shift cable holder on the transmission housing.

21. Install the control lever with a new lock washer to the control shaft.

CAUTION: Take care not to bend the shift cable.

22. Install the shift cable cover.

23. Install the exhaust manifold stay.

24. Install the exhaust pipe A.

25. Install the two bolts of the exhaust pipe A stay to the transmission rear cover.

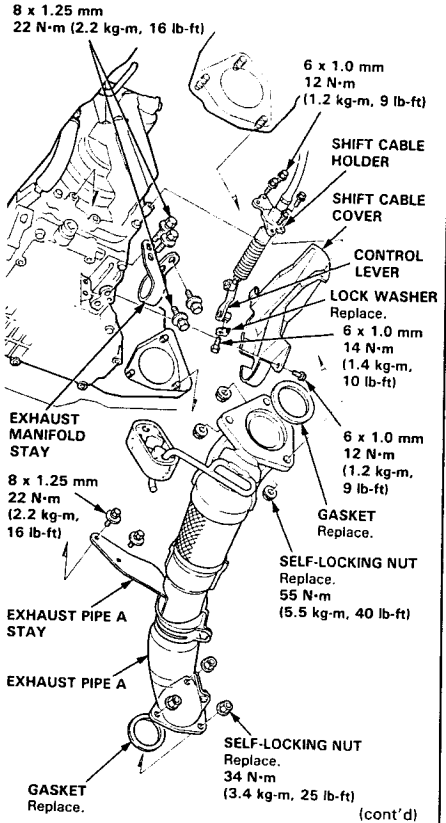

(cont'd)

Installation (cont'd)

26. Install the transmission under-guard.

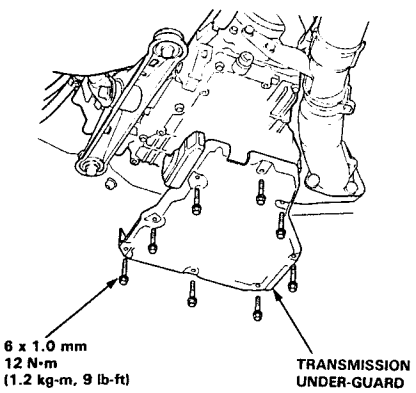

27. Attach the torque converter to the drive plate with eight bolts and torque to 12 N·m (1.2 kg-m, 9lb-ft). Rotate the crankshaft as necessary to tighten the bolts to 1/2 of the specified torque, then final torque, in a criss-cross pattern. After tightening the last bolt, check that the crankshaft rotates freely.

28. Install the torque converter cover.

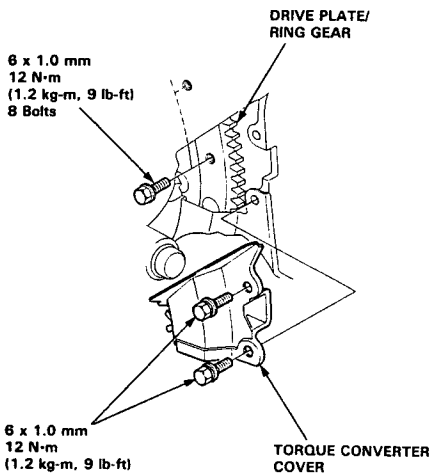

29. Install the transmission ground cable.

30. Connect the transmission sub-harness connector.

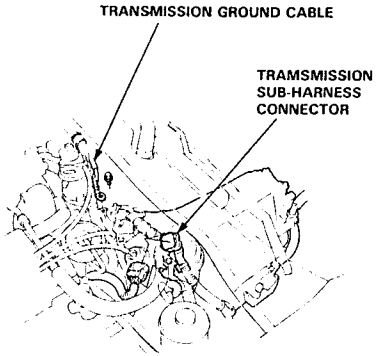

31. Install the control box, then connect the connector.

32. Install the collar with new O-rings in the distributor.

CAUTION: Do not install the collar in the cylinder head.

33. Install the distributor to the cylinder head.

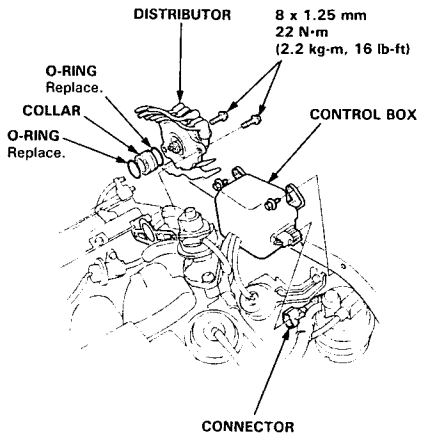

34. Install the heat shield.

35. Install the sub-ground cable.

36. Install the under-hood ABS fuse/relay box.

37. Install the battery with the battery box.

38. Install the battery set plate.

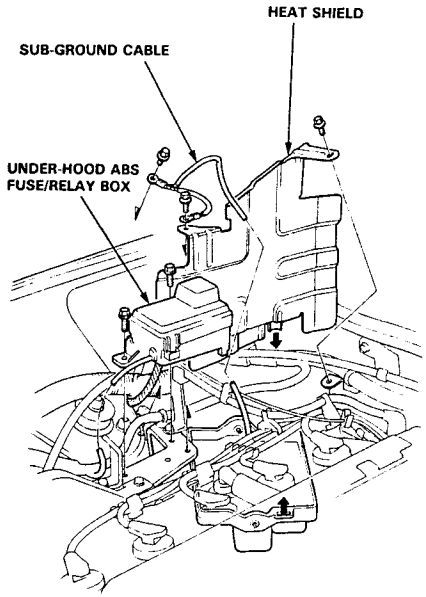

39. Refill the transmission with ATF (see page 14-91).

40. Connect the battery positive (+) and negative (–) cables to the battery.

41. Check the ignition timing (see section 23).

42. Start the engine. Set the parking brake, and shift the transmission through all gears three times. Check for proper shift cable adjustment.

43. Let the engine reach normal operating temperature (the radiator fan comes on) with the transmission in N or P position, then turn it off and check fluid level.

44. Road test as described on pages 14-88 and 89.

45. Reset the radio stations.

Cooler Flushing

WARNING To prevent injury to face and eyes, always wear safety glasses or a face shield when using the transmission flusher.

NOTE: This procedure should be performed before reinstalling the transmission.

1. Check tool and hoses for wear or cracks before using. If wear or cracks are found, replace the hoses before using.

2. Using the measuring cup, fill the tank with 21 ounces (approximately 2/3 full) of biodegradable flushing fluid (J35944-20). Do not substitute with any other fluid. Follow the handling procedure on the fluid container.

3. Secure the flusher filler cap and pressurize the tank with compressed air to between 560–845 kPa (5.6–8.45 kg/cm², 80–120 psi).

   NOTE: The air line should be equipped with a water trap to ensure a dry air system.

4. Hang the tool under the vehicle.

5. Attach the discharge hose of the tank to the return line of the transmission cooler using a clamp.

6. Connect the drain hose to the inlet line of the transmission cooler using a clamp.

   IMPORTANT: Securely clamp the opposite end of the drain hose to a bucket or floor drain.

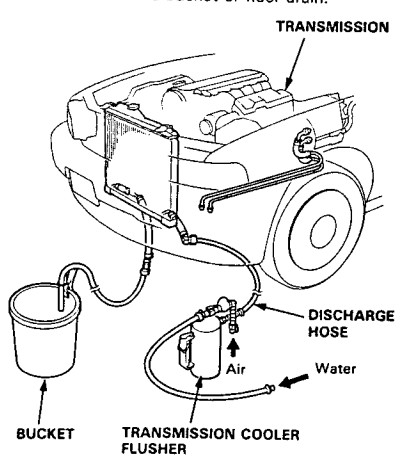

7. With the water and air valves off, attach the water and air supplies to the flusher. (Hot water if available.)

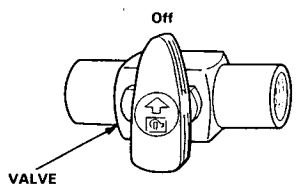

8. Turn on the flusher water valve so water will flow through the oil cooler for 10 seconds.

   NOTE: If water does not flow through the oil cooler it is completely plugged, cannot be flushed, and must be replaced.

9. Depress the trigger to mix the flushing fluid into the water flow. Use the wire clip to hold the trigger down.

10. While flushing with the water and flushing fluid for 2 minutes, turn the air valve on for 5 seconds every 15–20 seconds to create a surging action.
    AIR PRESSURE:
    MAX 845 kPa (8.45 kg/cm², 120 psi)

11. Turn the water valve off. Release the trigger, then reverse the hoses to the cooler so you can flush in the opposite direction. Repeat steps 8 through 10.

12. Release the trigger and allow water only to rinse the cooler with water for one minute.

13. Turn the water valve off and turn off the water supply.

14. Turn the air valve on to dry the system out with air for two full minutes or until no moisture is visible leaving the drain hose.

    CAUTION: Residual moisture in the ATF cooler or pipes can damage the transmission.

15. Remove the flusher from the cooler line. Attach the drain hose to an oil container.

16. Install the transmission and leave the drain hose attached to the cooler line.

17. Make sure the transmission is in the [P] position. Then fill the transmission with ATF and run the engine for 30 seconds or until approximately 0.95 ℓ (1.0 US qt., 0.8 Imp qt.) is discharged.

18. Remove the drain hose and reconnect the cooler return hose to the transmission.

19. Refill the transmission with ATF to the proper level.

TOOL MAINTENANCE

1. Empty and rinse after each use. Fill the can with water and pressurize the can. Flush the discharge line to ensure that the unit is clean.

2. If discharge liquid does not foam, the orifice may be blocked.

3. To clean, remove the coupling nut.

4. Remove the in-line filter from the discharge side and clean if necessary.

5. The fluid orifice is located behind the filter. Clean it with the pick stored in the bottom of the tank handle or blow it clean with air. Securely reassemble all parts.

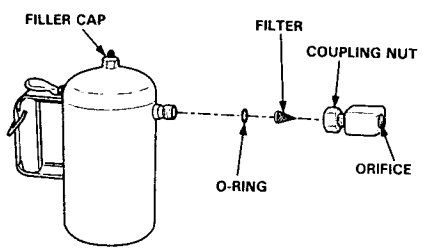

Gearshift Selector

Disassembly/Reassembly

CAUTION:
- All SRS electrical wiring harnesses are covered with yellow outer insulation.
- Before disconnecting the SRS wire harness, install the short connector(s) on the airbag(s).
- Replace the entire affected SRS harness assembly if it has an open circuit or damage wiring.

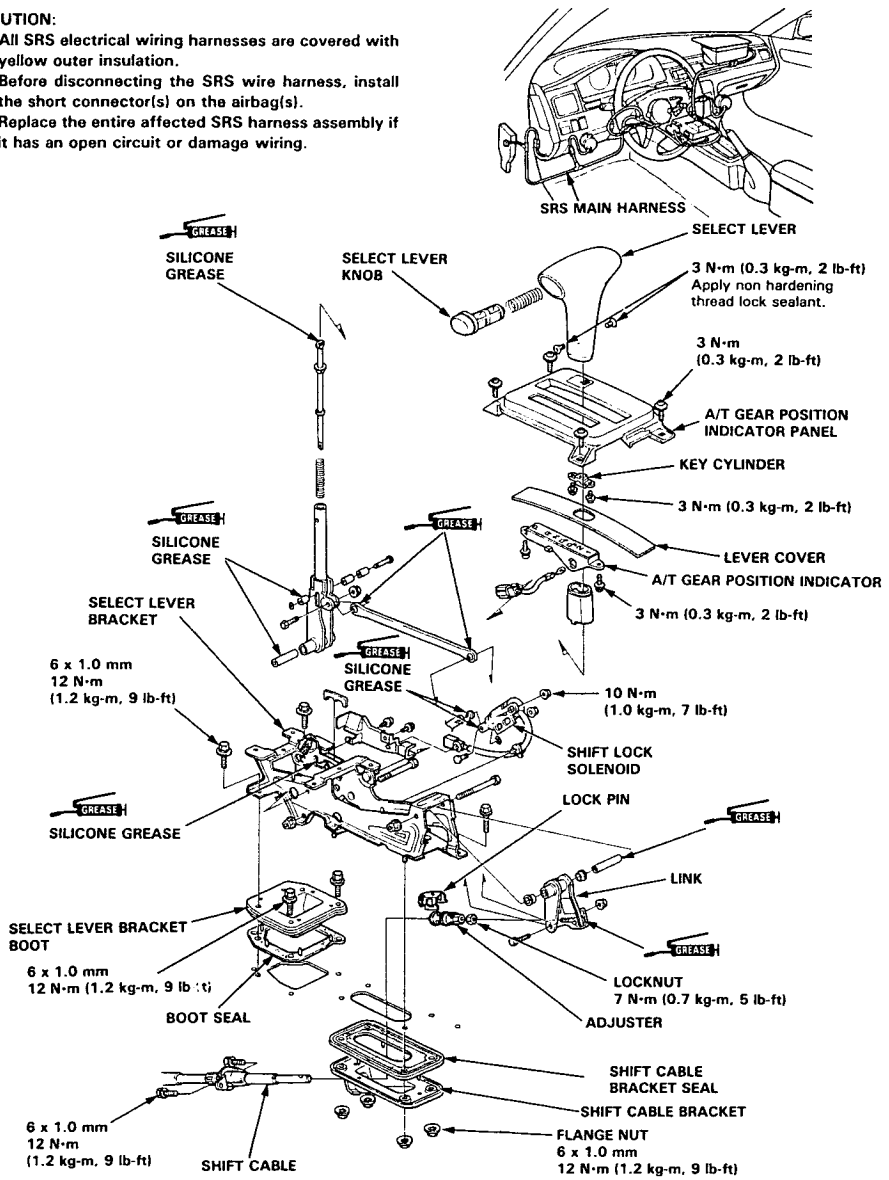

Shift Cable

Removal/Installation

CAUTION:
- All SRS electrical wiring harnesses are covered with yellow outer insulation.
- Before disconnecting the SRS wire harness, install the short connector(s) on the airbag(s).
- Replace the entire affected SRS harness assembly if it has an open circuit or damaged wiring.

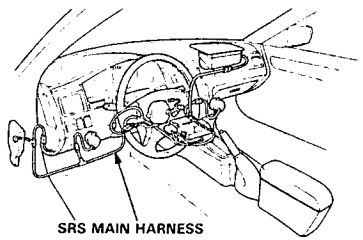

WARNING
- Make sure lifts, jacks and safety stands are placed properly (see section 1).
- Apply parking brake and block rear wheels, so the car will not roll off of the stands and fall while you are working under it.

1. Remove the center console (see section 20).
2. Shift to N position, then remove the lock pin from the cable adjuster.

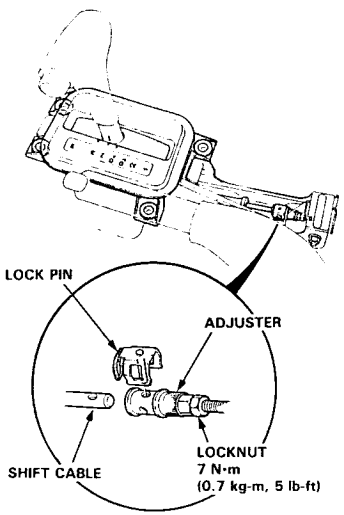

3. Remove the exhaust pipe A/catalytic converter/exhaust pipe B assembly (see section 9).
4. Remove the floor heat shield.
5. Remove the shift cable bracket and shift cable guide bracket.

   CAUTION: Take care not to bend the cable when removing/installing it.

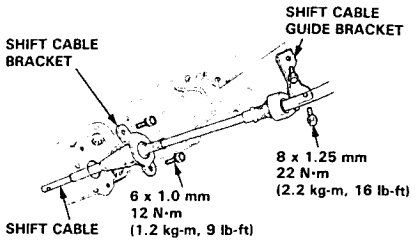

6. Remove the shift cable cover.
7. Remove the shift cable holder from the transmission rear cover.
8. Remove the control lever from the control shaft, then remove the shift cable.
9. Remove the shift cable holder from the shift cable.

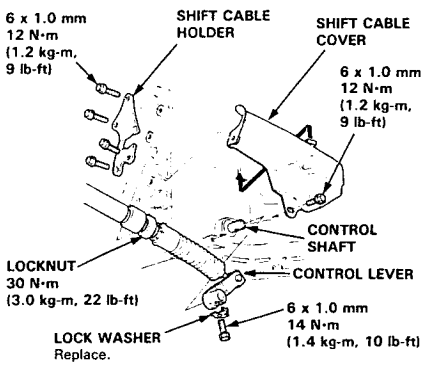

10. Install the shift cable in the reverse order of removal.
11. Check the cable adjustment after reassembly (see page 14-182 and 183).

Shift Cable

Adjustment

CAUTION:
- All SRS electrical wiring harnesses are covered with yellow outer insulation.
- Before disconnecting the SRS wire harness, install the short connector(s) on the airbag(s).
- Replace the entire affected SRS harness assembly if it has an open circuit or damaged wiring.

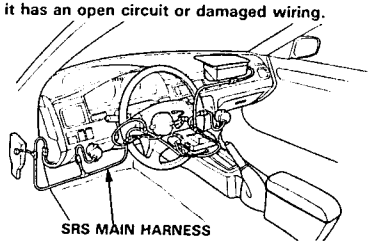

WARNING
- Make sure lifts, jacks and safety stands are placed properly (see section 1).
- Apply parking brake and block rear wheels, so the car will not roll off of the stands and fall while you are working under it.

1. Start the engine. Shift to [R] position and see if the reverse gear engages. If not, refer to troubleshooting.
2. With the engine off, remove the center console (see section 20).
3. Shift to [N] position, then remove the lock pin from the cable adjuster.

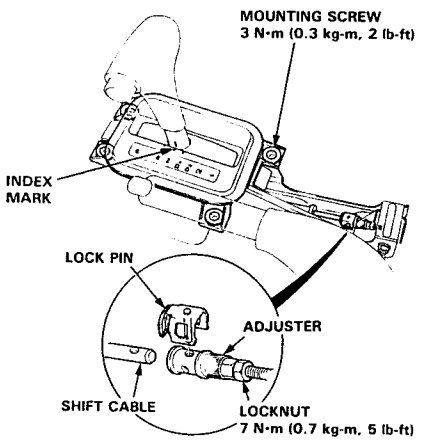

4. Insert a 6 mm pin into the select lever bracket through the lock pin sliding hole.

   CAUTION: Be sure to use a 6 mm pin.

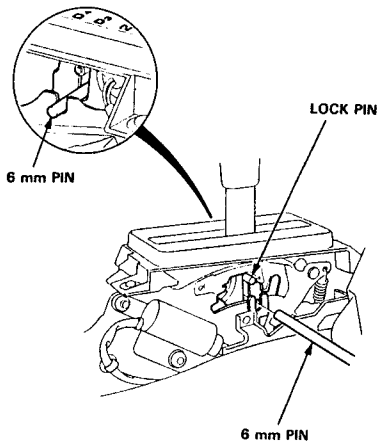

5. Verify that the shift position is in [N] position on the transmission.

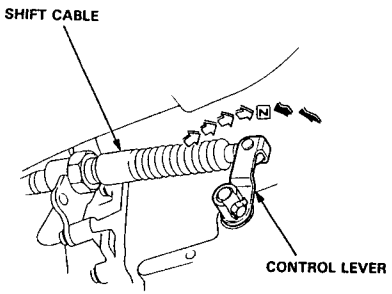

6. Verify that the index mark of the select lever aligns with the [N] mark of the A/T gear position indicator panel. If not aligned, remove the A/T gear position indicator panel mounting screws and adjust by removing the panel (see page 14-184).
7. Turn the ignition switch to ON position, verify that the [N] indicator light comes on.

   CAUTION: Do not start the engine.

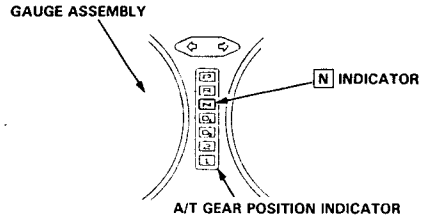

8. Check that the hole in the adjuster is perfectly aligned with the hole in the shift cable.

   NOTE: There are two holes in the end of the shift cable. They are positioned 90° apart to allow cable adjustment in 1/4 turn increments.

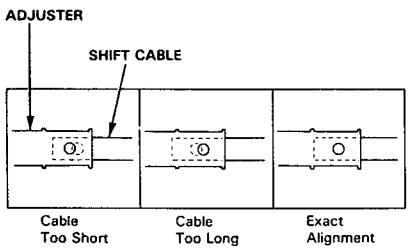

9. If not perfectly aligned, loosen the locknut on shift cable and adjust as required.
10. Tighten the locknut to 7 N·m (0.7 kg-m, 5 lb-ft).
11. Install the lock pin on the adjuster.

    NOTE: If you feel the lock pin binding as you reinstall it, the cable is still out of adjustment and must be readjusted.

12. Remove the 6 mm pin from the select lever bracket.
13. Shift the select lever to [P] position. Pull the select lever without pressing the select lever knob and measure the distance shown using a ruler.

    NOTE: When measuring, hold the tip of the ruler against the console and mark at any point on the top of the select lever.

    STANDARD: 0–4 mm (0–0.16 in)
    - Measure at the top of the select lever

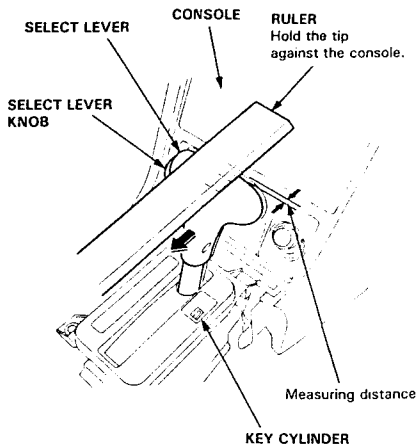

14. If the distance is beyond the standard, readjust the alignment holes in the adjuster and shift cable.
15. Move the select lever through all gears and verify that the A/T gear position indicator follows the A/T gear position switch.
16. Start the engine and check the shift lever in all gears. If any gear does not work properly, refer to troubleshooting on page 14-84 through 87.
17. Insert the ignition key into the key cylinder on the A/T gear position indicator panel and verify that the shift lock lever is released.

A/T Gear Position Indicator Panel

Adjustment

CAUTION:
- All SRS electrical wiring harnesses are covered with yellow outer insulation.
- Before disconnecting the SRS wire harness, install the short connector(s) on the airbag(s).
- Replace the entire affected SRS harness assembly if it has an open circuit or damaged wiring.

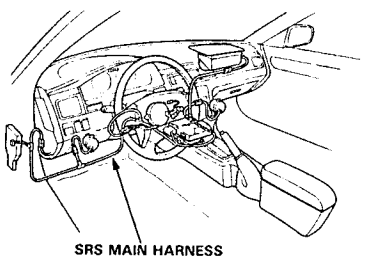

1. Check that the index mark of the select lever aligns with the [N] mark of the A/T gear position indicator panel with the transmission in [N] position.
2. If not aligned, remove the center console (see section 20).
3. Remove the A/T gear position indicator panel mounting screws and adjust by moving the panel.

   NOTE: Whenever the A/T gear position indicator panel is removed, reinstall the panel as described above.

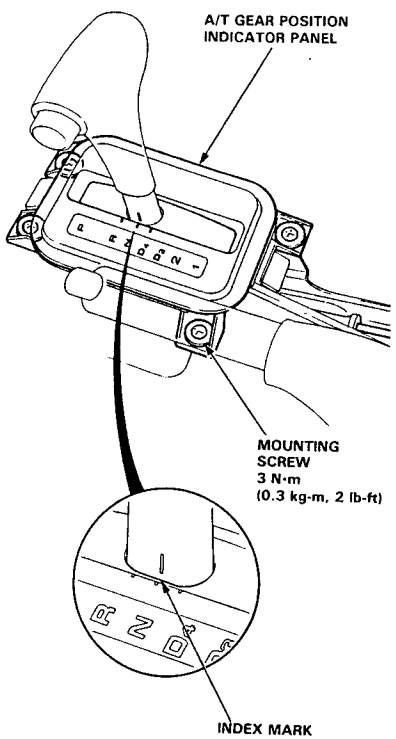

Differential

Special Tools 15-2
Differential
  Troubleshooting 15-3
Maintenance
  Differential Oil 15-4
Differential Assembly
  Removal 15-5
  Illustrated Index 15-8
  Inspection 15-9
  Disassembly 15-11
Differential Carrier
  Tapered Roller Bearing
    Replacement 15-14
  Backlash Inspection 15-15
  Ring Gear Replacement 15-15
Differential Assembly
  Reassembly 15-16
Drive Pinion
  Height Adjustment 15-25
Ring Gear Tooth Contact
  Adjustment 15-26
Ring Gear Backlash
  Adjustment 15-26
Differential Assembly
  Installation 15-27