NOTE: (If Fuel and Emission maintenance is required):
The radio has a coded theft protection circuit.
If some service to the car requires any of the following, be sure you get the customer's code number before you begin work:
– disconnecting the battery.
– removing the No. 39 BACK UP (10 A) fuse in the under-hood fuse/relay box.
– removing the radio.
After service, reconnect power to the radio and turn it ON.
The word "CODE" will be displayed. Enter the customer's 5-digit code to restore radio operation.

Fuel and Emissions

Special Tools 11-2
Component Locations
Index 11-3
System Description
Vacuum Connections 11-5
Electrical Connections 11-8
System Connectors 11-16
Troubleshooting
Troubleshooting Guide 11-34
Self-diagnostic Procedures 11-36
How to Read Flowcharts 11-41

PGM-FI System
System Description 11-42
Troubleshooting Flowcharts
Engine Control Module 11-44
Heated Oxygen Sensor 11-48
Heated Oxygen Sensor Heater 11-50
Fuel Supply System 11-54
Fuel Metering System 11-56
Manifold Absolute Pressure Sensor 11-58
Top Dead Center/Crankshaft Position/ Cylinder Position Sensor 11-64
Engine Coolant Temperature Sensor 11-66
Throttle Position Sensor 11-68
Intake Air Temperature Sensor 11-70
Barometric Pressure Sensor 11-72
Ignition Output Signal 11-74
Vehicle Speed Sensor 11-76
Ignition Timing Adjuster 11-78
Electrical Load Detector 11-80
Knock Sensor 11-84
A/T FI Signal A/B 11-86

Idle Control System
System Troubleshooting Guide 11-88
System Description 11-89
Troubleshooting Flowcharts
Idle Air Control Valve 11-92
Air Conditioning Signal 11-94
Alternator FR Signal 11-96
Automatic Transaxle (A/T) Gear Position Signal 11-98
Starter Switch Signal 11-100
Brake Switch Signal 11-102
Power Steering Pressure Switch Signal ... 11-104
Fast Idle Thermo Valve 11-105
Idle Speed Setting 11-106

Fuel Supply System
System Troubleshooting Guide 11-107
System Description 11-108
Fuel Pressure 11-108
Fuel Injectors 11-110
Injector Resistor 11-115
Fuel Pressure Regulator 11-116
Fuel Filter 11-117
Fuel Pump 11-118
PGM-FI Main Relay 11-120
Fuel Tank 11-124

Intake Air System
System Troubleshooting Guide 11-125
System Description 11-126
Air Cleaner 11-127
Throttle Cable 11-128
Throttle Body 11-129
Intake Air Bypass Control System 11-132

Emission Control System
System Troubleshooting Guide 11-137
System Description 11-138
Tailpipe Emission 11-138
Three Way Catalytic Converter 11-139
Exhaust Gas Recirculation System 11-141
Positive Crankcase Ventilation System 11-147
Evaporative Emission Control 11-148

Special Tools

Ref. No.	Tool Number	Description	Q'ty	Page Reference
①	A973X–041–XXXXX	Vacuum Pump/Gauge	1	11-62, 129, 133, 142, 150, 153
②	KS–AHM–32–003	Digital Multimeter	1	11-39, 50, 55
③	07LAJ–PT3010A	Test Harness	1	11-39
④	07JAZ–001000B	Vacuum/Pressure Gauge 0–4 in. Hg	1	11-152, 153
⑤	07406–0040001	Fuel Pressure Gauge	1	11-109, 116

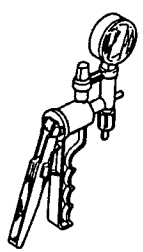

①

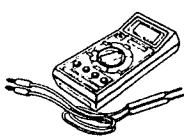

②

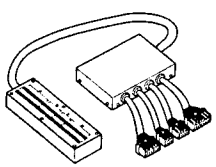

③

④

⑤

Component Locations

Index

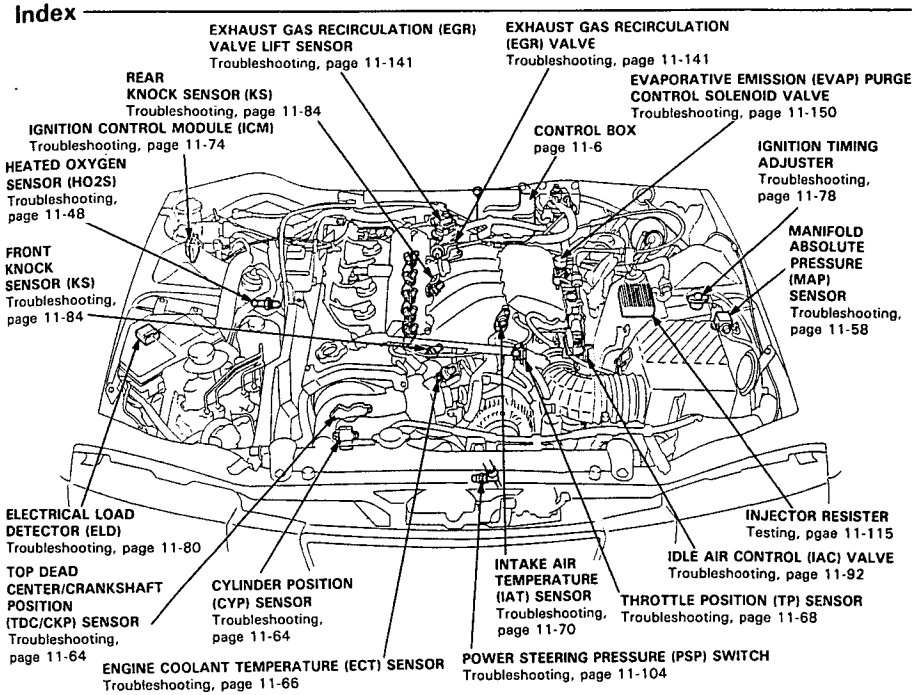

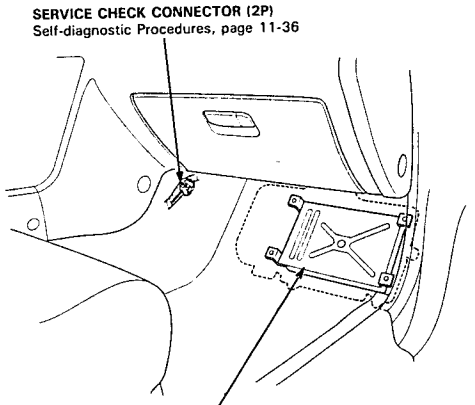

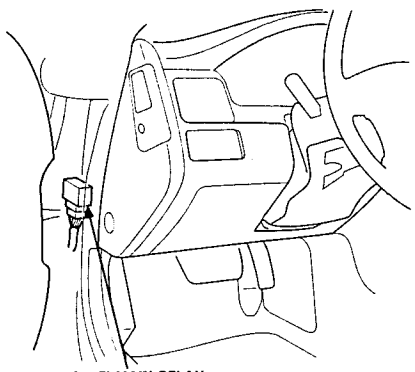

Component Locations

Index

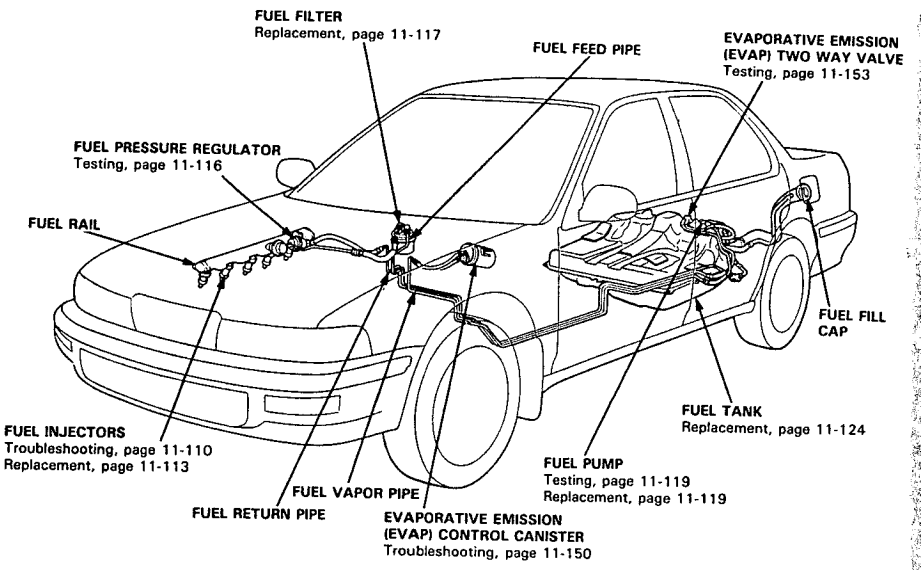

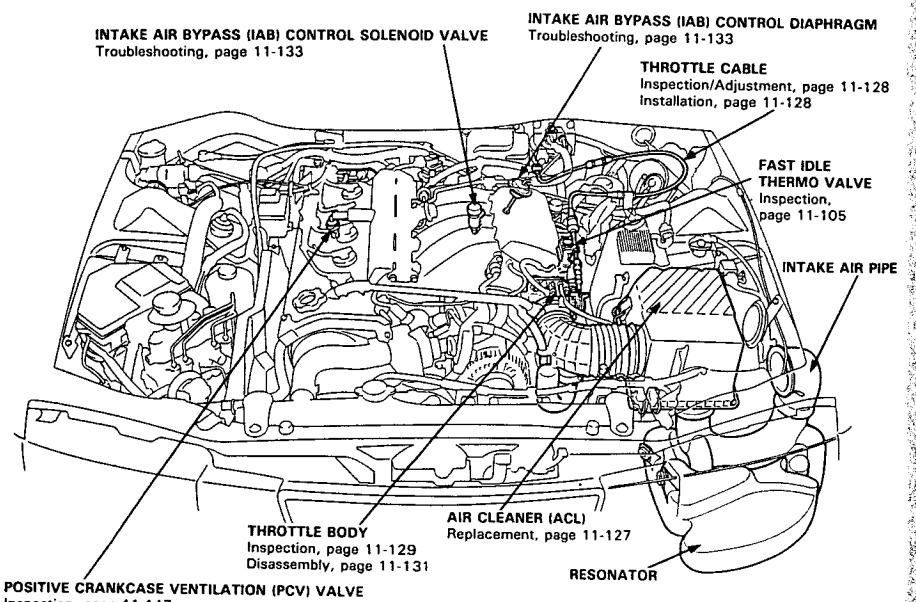

System Discription

Vacuum Connections

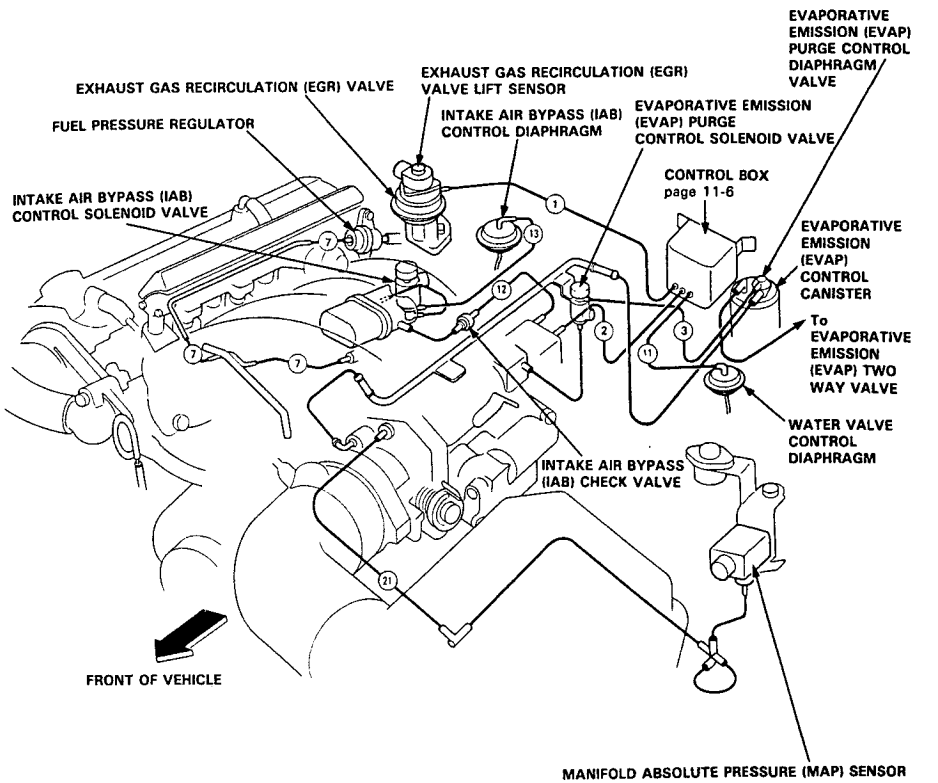

(cont'd)

System Description

Vacuum Connections (cont'd)

Control Box

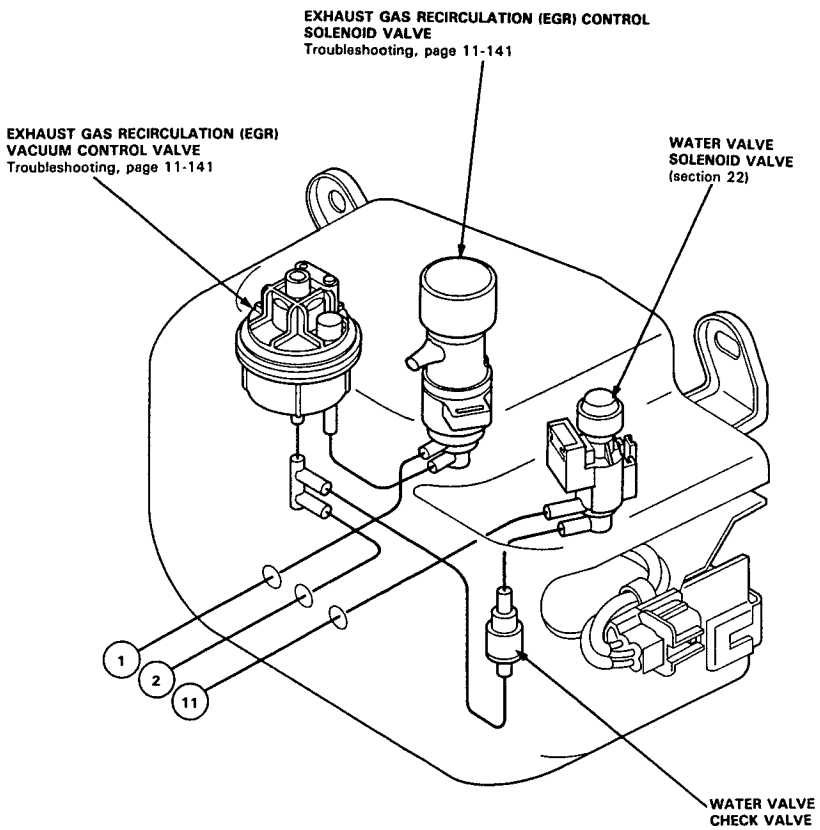

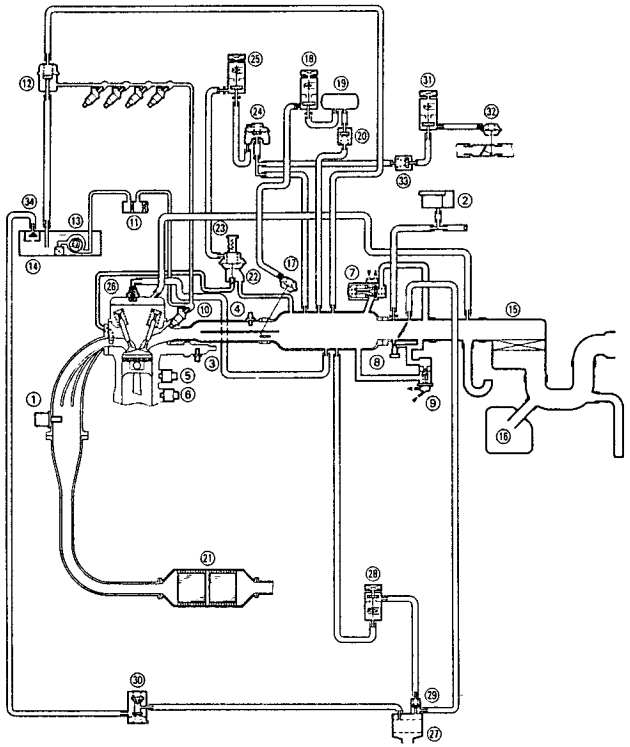

① HEATED OXYGEN SENSOR (HO2S)
② MANIFOLD ABSOLUTE PRESSURE (MAP) SENSOR
③ ENGINE COOLANT TEMPERATURE (ECT) SENSOR
④ INTAKE AIR TEMPERATURE (IAT) SENSOR
⑤ FRONT KNOCK SENSOR (KS)
⑥ REAR KNOCK SENSOR (KS)
⑦ IDLE AIR CONTROL (IAC) VALVE
⑧ IDLE ADJUSTING SCREW
⑨ FAST IDLE THERMO VALVE
⑩ FUEL INJECTOR
⑪ FUEL FILTER
⑫ FUEL PRESSURE REGULATOR
⑬ FUEL PUMP
⑭ FUEL TANK
⑮ AIR CLEANER (ACL)
⑯ RESONATOR
⑰ INTAKE AIR BYPASS (IAB) CONTROL DIAPHRAGM
⑱ INTAKE AIR BYPASS (IAB) CONTROL SOLENOID VALVE
⑲ INTAKE AIR BYPASS (IAB) VACUUM TANK
⑳ INTAKE AIR BYPASS (IAB) CHECK VALVE
㉑ THREE WAY CATALYTIC CONVERTER (TWC)
㉒ EXHAUST GAS RECIRCULATION (EGR) VALVE
㉓ EXHAUST GAS RECIRCULATION (EGR) VALVE LIFT SENSOR
㉔ EXHAUST GAS RECIRCULATION (EGR) VACUUM CONTROL VALVE
㉕ EXHAUST GAS RECIRCULATION (EGR) CONTROL SOLENOID VALVE
㉖ POSITIVE CRANKCASE VENTILATION (PCV) VALVE
㉗ EVAPORATIVE EMISSION (EVAP) CONTROL CANISTER
㉘ EVAPORATIVE EMISSION (EVAP) PURGE CONTROL SOLENOID VALVE
㉙ EVAPORATIVE EMISSION (EVAP) PURGE CONTROL DIAPHRAGM VALVE
㉚ EVAPORATIVE EMISSION (EVAP) TWO WAY VALVE
㉛ WATER VALVE SOLENOID VALVE
㉜ WATER VALVE CONTROL DIAPHRAGM
㉝ WATER VALVE CHECK VALVE
㉞ FUEL TANK EVAPORATIVE EMISSION (EVAP) VALVE

System Description

Electrical Connections

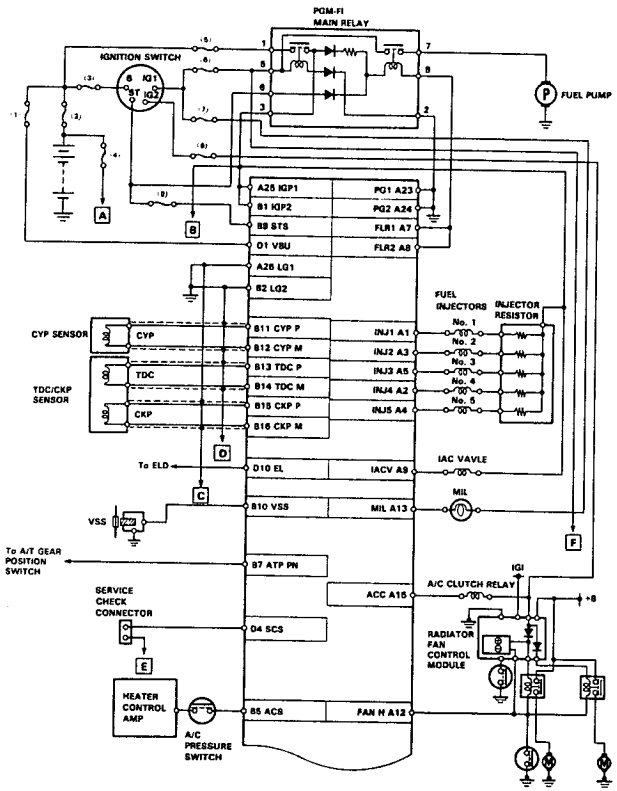

FUSES

① BACK UP (10 A)*
② BATTERY (100 A)*
③ IG (50 A)*
④ STOP HORN (20 A)*
⑤ ECU (ECM) (10 A)*
⑥ No. 2 ECU (ECM) (15 A)
⑦ No. 1 BACK UP LIGHTS (10 A)
⑧ No. 8 A/C CLUTCH RELAY (7.5 A)
⑨ No. 9 STARTER SIGNAL (7.5 A)
*: In the under-hood fuse/relay box

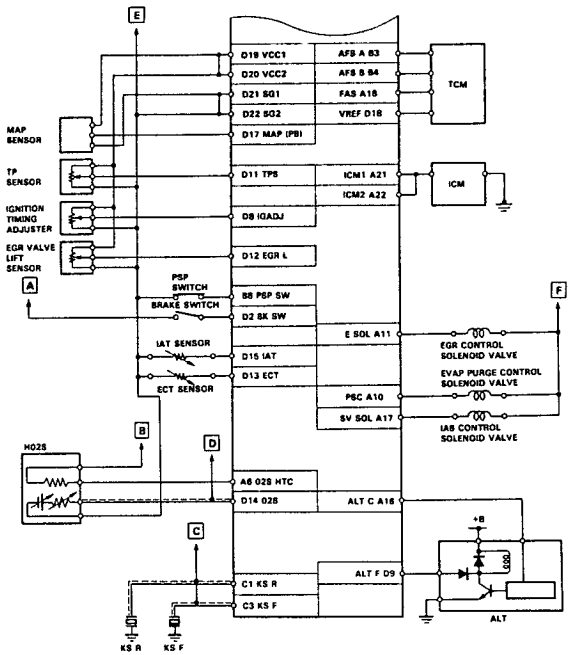

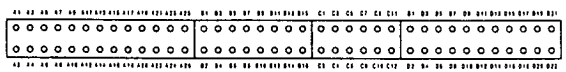

TERMINAL LOCATIONS

(cont'd)

System Description

Electrical Connections (cont'd)

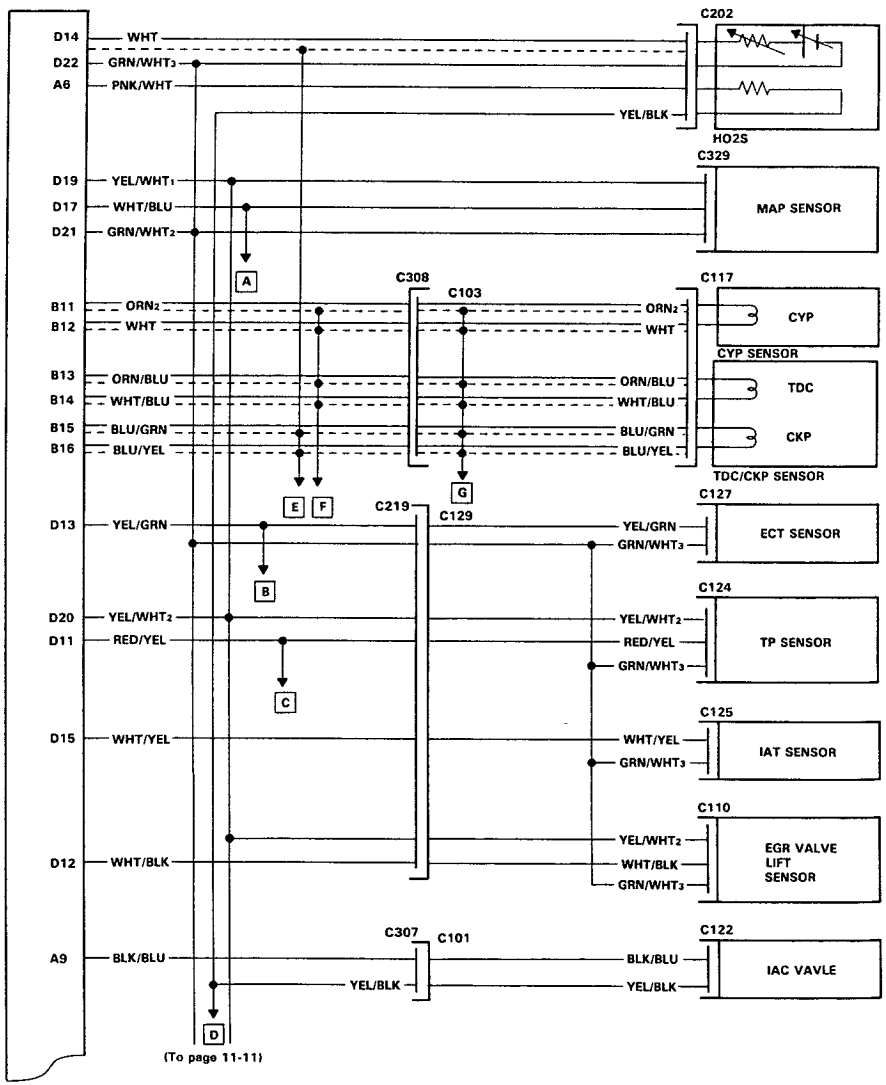

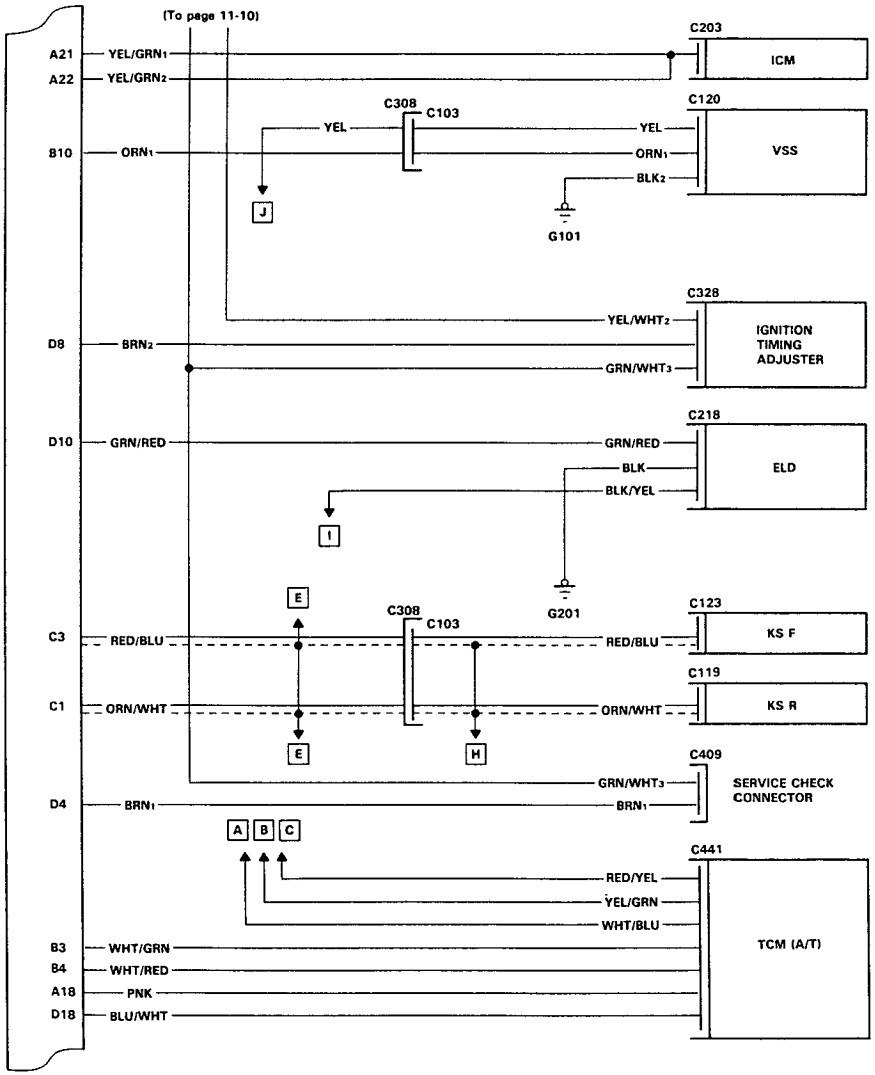

(cont'd)

System Description

Electrical Connections (cont'd)

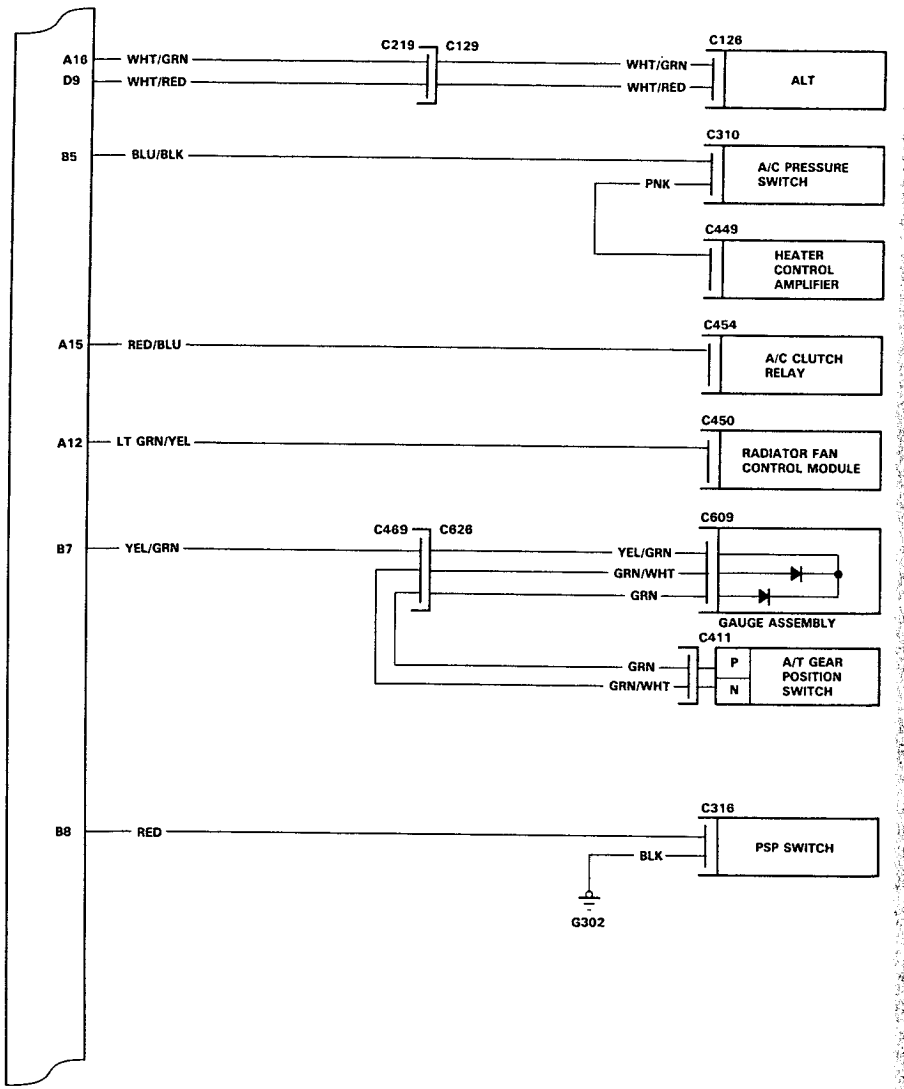

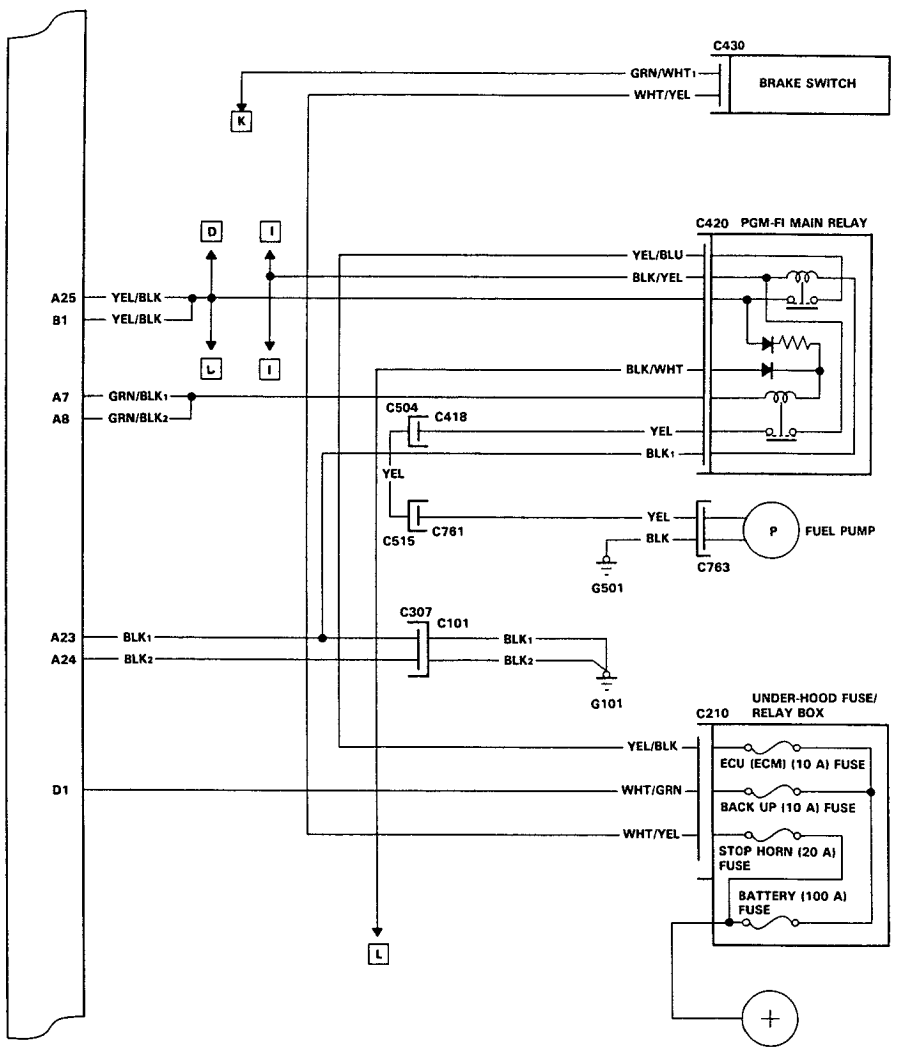

(cont'd)

System Description

Electrical Connections (cont'd)

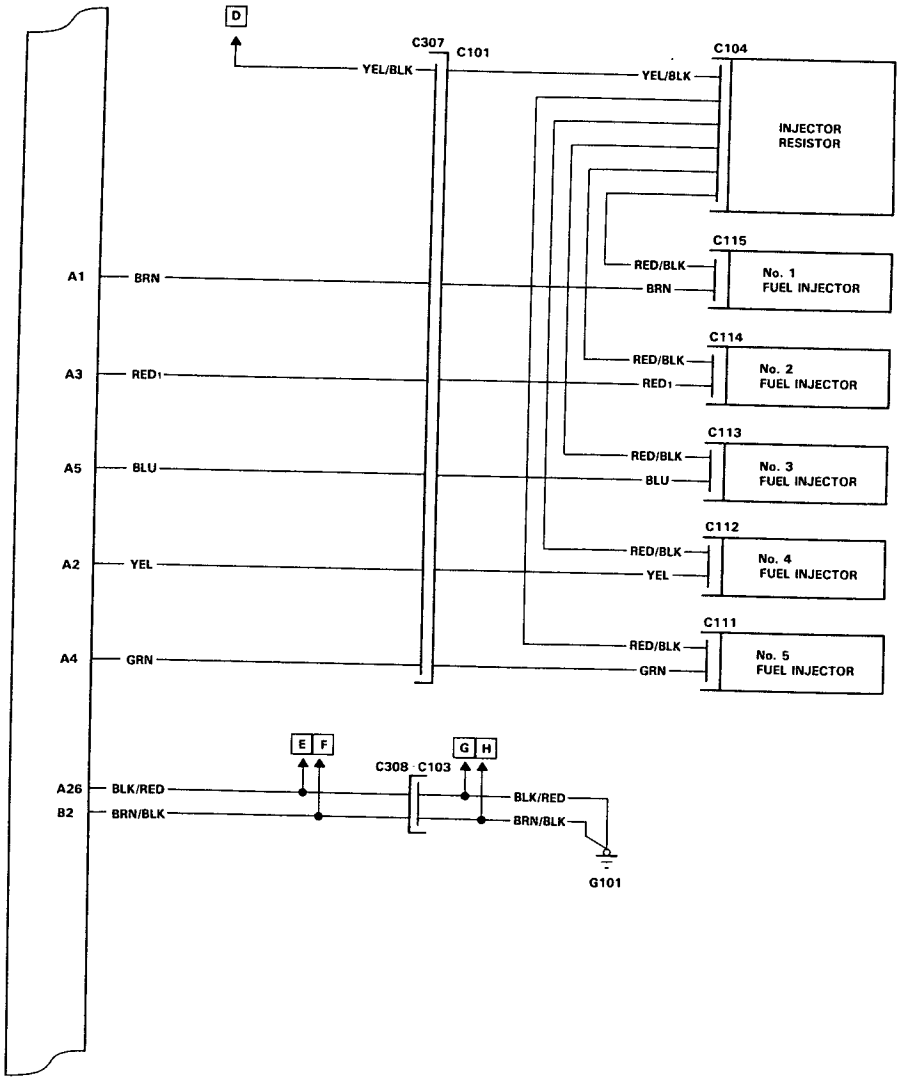

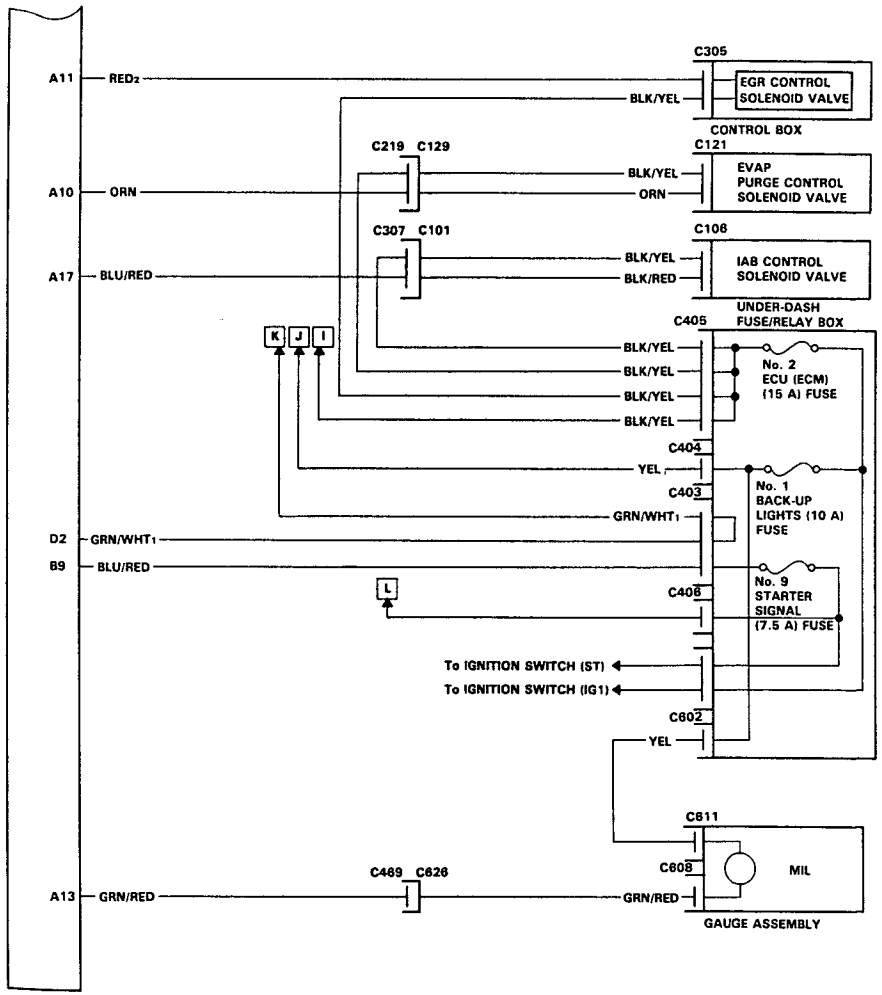

System Description

System Connectors [Engine Compartment]

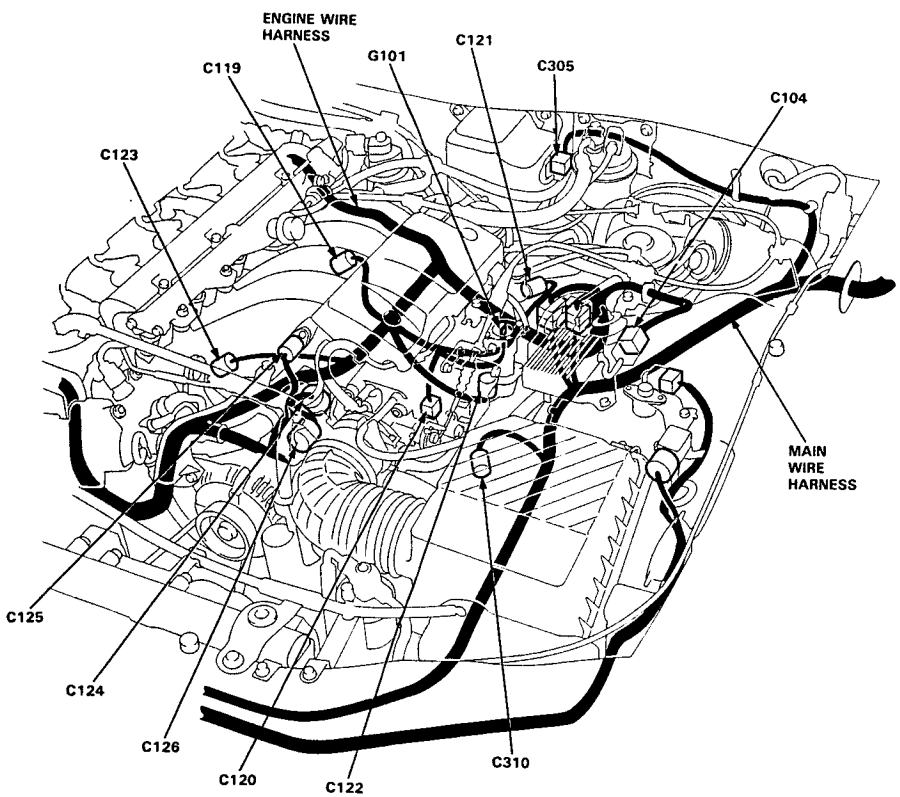

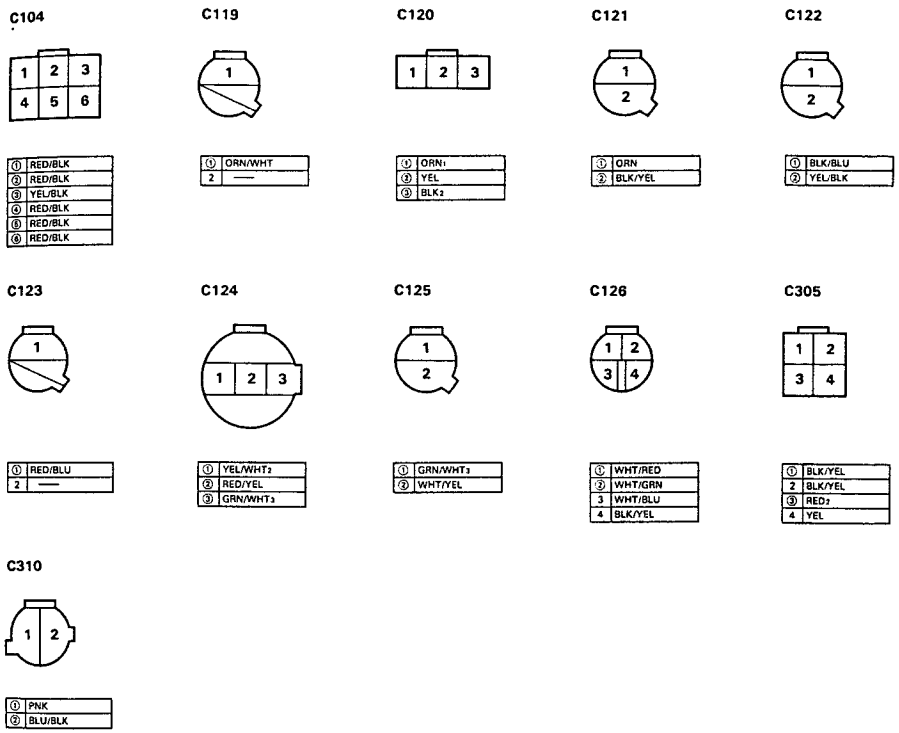

NOTE: Different wires with the same color have been given a number suffix to distinguish them (for example YEL/BLK1 and YEL/BLK2 are not the same).
O: Related to Fuel and Emissions System.

(cont'd)

System Description

System Connectors [Engine Compartment] (cont'd)

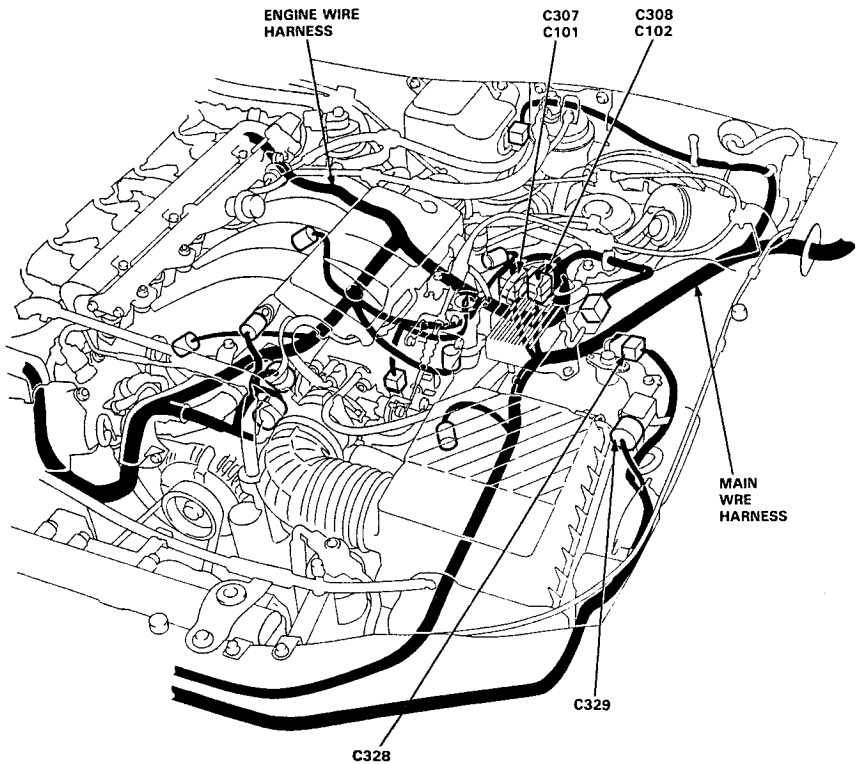

C307

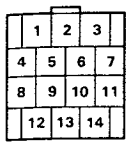

①	RED₁	⑨	BLK₁
②	BRN	10	YEL (M/T)
③	YEL/BLK	10	GRY (A/T)
④	YEL	11	GRN/BLK (M/T)
⑤	BLU	11	BRN (A/T)
⑥	BLK/YEL	⑫	BLK₂
⑦	BLU/RED	⑬	BLK/BLU
⑧	GRN	⑭	YEL/BLK

C308

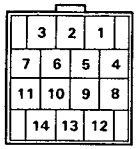

①	GRN/BLU	⑧	ORN₁
②	WHT/BLU	⑨	ORN/WHT
③	ORN₂	⑩	BLK/RED
④	YEL	⑪	BLU/YEL
⑤	BRN/BLK	⑫	RED/BLU
⑥	WHT	13	RED
⑦	BLU/GRN	14	YEL/RED

C328

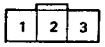

①	GRN/WHT₃
②	BRN₂
③	YEL/WHT₂

C329

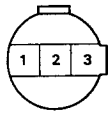

①	WHT/BLU
②	GRN/WHT₂
③	YEL/WHT₁

NOTE: Different wires with the same color have been given a number suffix to distinguish them (for example YEL/BLK₁ and YEL/BLK₂ are not the same).
O: Related to Fuel and Emissions System.

(cont'd)

System Description

System Connectors [Engine Compartment] (cont'd)

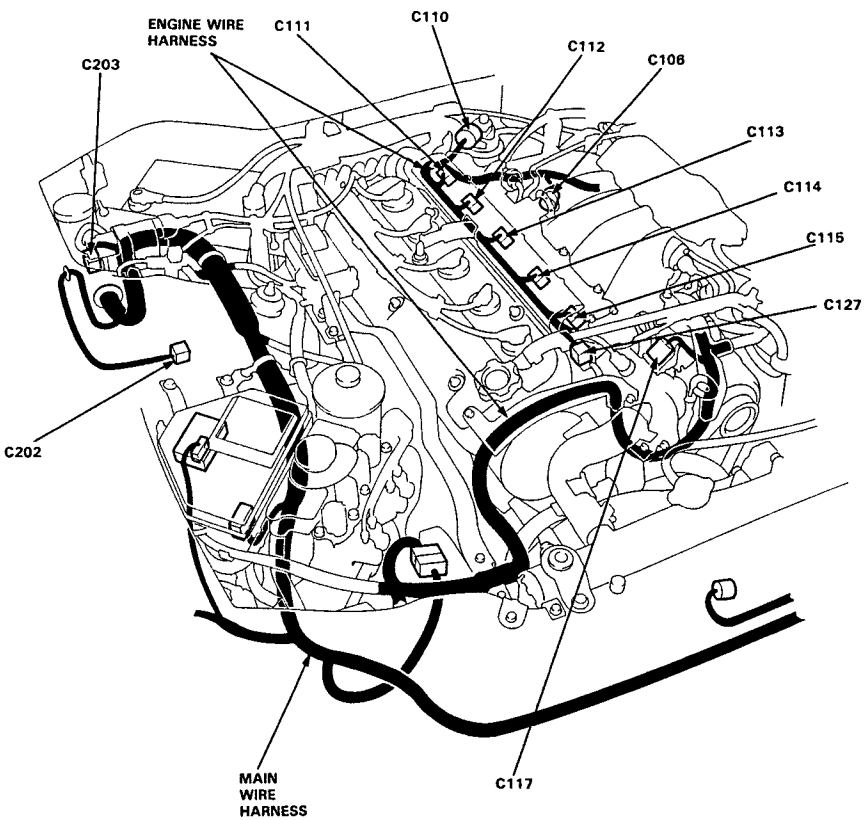

C106

①	BLU/RED
②	BLK/YEL

C110

①	YEL/WHT$_2$
②	GRN/WHT$_3$
③	WHT/BLK

C111

①	GRN
②	RED/BLK

C112

①	YEL
②	RED/BLK

C113

①	BLU
②	RED/BLK

C114

①	RED$_1$
②	RED/BLK

C115

①	BRN
②	RED/BLK

C117

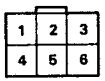

①	WHT
②	BLU/YEL
③	WHT/BLU
④	ORN$_2$
⑤	BLU/GRN
⑥	ORN/BLU

C127

①	GRN/WHT$_3$
②	YEL/GRN

C202

①	GRN/WHT$_3$
②	WHT
③	PNK/WHT
④	YEL/BLK

C203

1	BLU
②	YEL/GRN$_1$
3	BLK
4	BLK/YEL

NOTE: Different wires with the same color have been given a number suffix to distinguish them (for example YEL/BLK$_1$ and YEL/BLK$_2$ are not the same).
○: Related to Fuel and Emissions System.

(cont'd)

System Description

System Connectors [Engine Compartment] (cont'd)

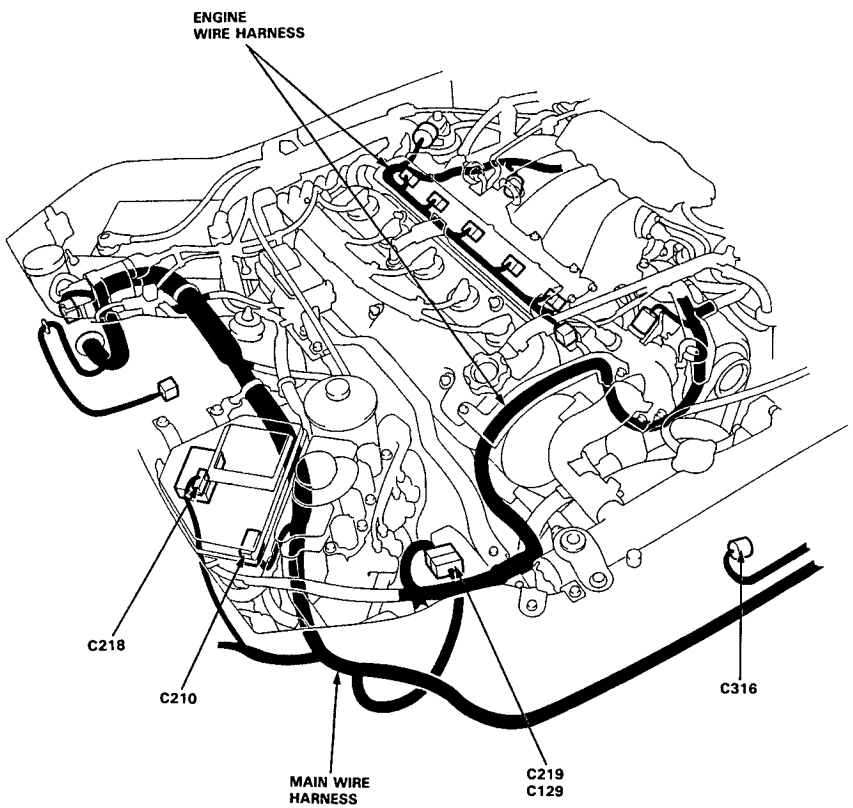

C210

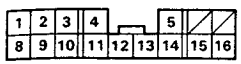

①	WHT/GRN	9	BLU/RED
2	WHT/BLU	10	WHT
3	WHT/GRN	11	RED
④	WHT/YEL	12	GRN/BLK
⑤	YEL/BLU	13	YEL/BLK
6	—	14	BLU/BLK
7	—	15	WHT/YEL
8	WHT	16	RED/GRN

C218

①	BLK
②	GRN/RED
③	BLK/YEL

C219

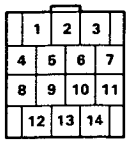

①	ORN	⑧	WHT/GRN
②	YEL/WHT₂	9	WHT/BLU
③	WHT/BLK	⑩	YEL/WHT₃
④	WHT/RED	⑪	YEL/GRN
⑤	BLK/YEL	12	BLK/YEL
6	GRN	⑬	GRN/WHT₃
⑦	WHT/YEL	⑭	RED/YEL

C316

①	RED
②	BLK

NOTE: Different wires with the same color have been given a number suffix to distinguish them (for example YEL/BLK₁ and YEL/BLK₂ are not the same).
O: Related to Fuel and Emissions System.

(cont'd)

System Description

System Connectors [Dash and Floor] (cont'd)

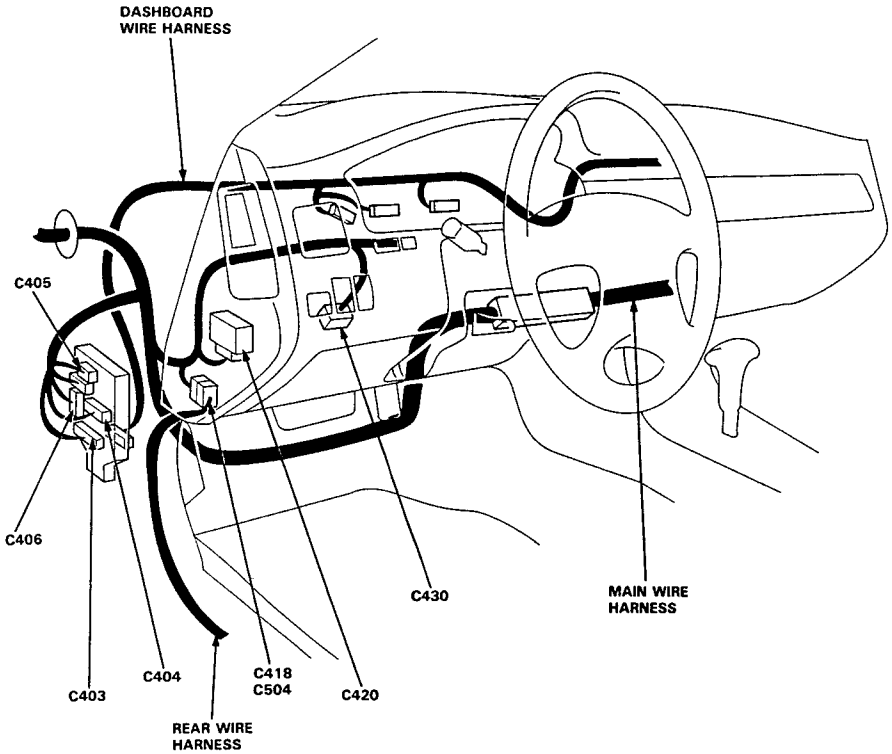

C403

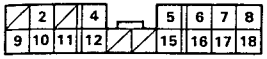

1	—	10	GRN/BLU
2	BLK/RED	11	RED/BLU
3	—	12	WHT/BLU
4	GRN/YEL	13	—
5	YEL/BLK	14	—
6	YEL/BLK	⑮	BLU/RED
7	GRN/WHT	16	YEL/BLK*
⑧	GRN/WHT1	⑰	GRN/WHT2
9	BLK/YEL	18	GRN/WHT

*: Canada

C404

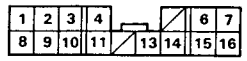

1	BLU	9	YEL
2	BLK	10	GRN/RED
3	GRN	11	YEL/RED
4	GRN/YEL	12	—
5	—	13	BLU
6	RED/BLK (A/T)	14	BLU
7	RED/BLK	15	BLU
⑧	YEL	16	BLU(A/T)

C405

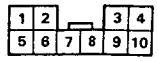

①	BLK/YEL	6	BLK
②	BLK/YEL	7	BLK
③	BLK/YEL	8	BLK
④	BLK/YEL	9	BLK
5	BLK	10	BLK/YEL

C406

1	BLK/YEL
②	BLK/WHT
3	GRN/BLK
4	WHT/BLU
5	—

C418

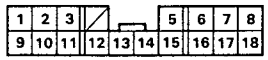

1	BLU/GRN*	10	GRN/WHT*
2	BLK/YEL*	11	GRN/BLU
3	RED/YEL*	12	GRN
4	—	13	GRN/YEL
5	YEL/RED	14	GRN/BLK
6	GRN/BLK	15	WHT/RED
7	GRN/YEL	⑯	YEL
8	BLU/YEL	17	LT BLU
9	GRN/ORN*	18	GRY

*: Excepe Canada LS (M/T)

C420

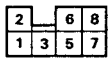

①	YEL/BLU	⑤	BLK/YEL
②	BLK1	⑥	BLK/WHT
③	YEL/BLK	⑦	YEL
4	—	⑧	GRN/BLK1

C430

①	WHT/YEL
2	GRN
3	LT GRN
④	GRN/WHT1

NOTE: Different wires with the same color have been given a number suffix to distinguish them (for example YEL/BLK1 and YEL/BLK2 are not the same).

○: Related to Fuel and Emissions System.

(cont'd)

System Description

System Connectors [Floor and Dash] (cont'd)

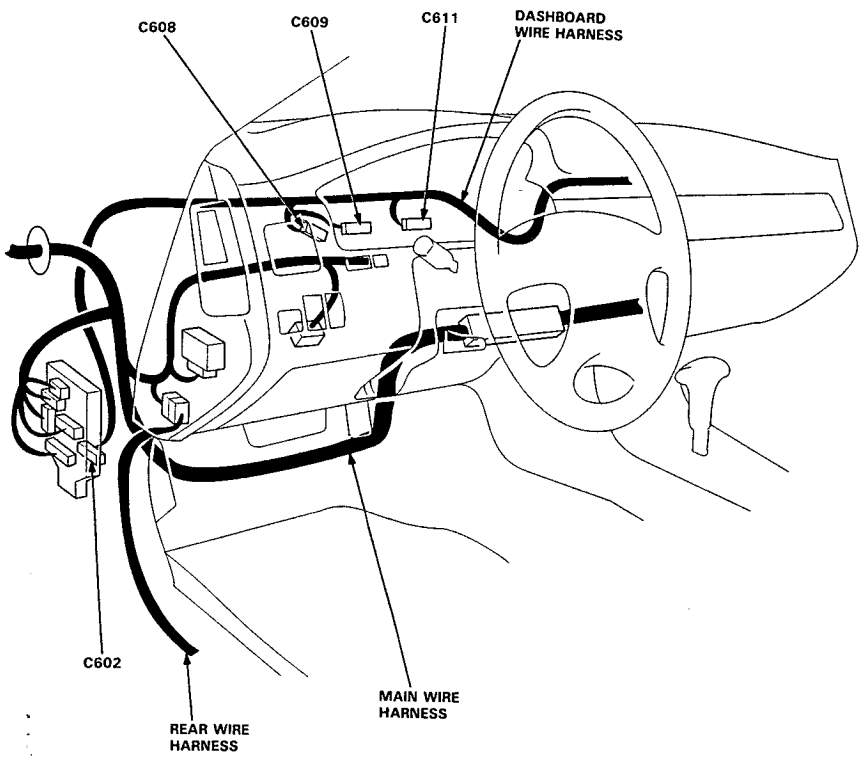

C602

①	YEL	10	GRN/RED
2	GRN/BLU	11	BLK/RED
3	YEL/RED	12	—
4	BLK/YEL	13	BLK
5	RED/BLU	14	YEL/GRN
6	GRN/BLU	15	GRN/YEL
7	BLU	16	RED/BLK
8	BLU/RED	17	YEL/WHT
9	GRN/WHT	18	YEL/BLK

C608

1	RED	6	BLK/YEL
②	GRN/RED	7	—
3	YEL/RED	8	RED/BLU
4	RED	9	—
5	WHT/BLU	10	—

C609 (A/T)

1	—	⑯	YEL/GRN
2	—	9	—
3	—	10	RED/WHT
4	ORN	⑮	GRN/WHT
5	GRN/YEL	12	GRN/RED
6	GRN/BLU	⑬	GRN
7	—	14	GRN/BLK

C611

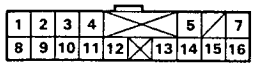

1	GRN/YEL	9	GRN/RED
2	GRN/BLU	10	RED/GRN
③	YEL	11	RED/BLU
4	BLU	12	BLU
5	ORN	13	BLU/RED
6	—	14	RED/BLK
7	BLK	15	WHT/GRN
8	RED	16	GRN/RED

NOTE: Different wires with the same color have been given a number suffix to distinguish them (for example YEL/BLK$_1$ and YEL/BLK$_2$ are not the same).
○: Related to Fuel and Emissions System.

(cont'd)

System Description

System Connectors [Dash and Floor] (cont'd)

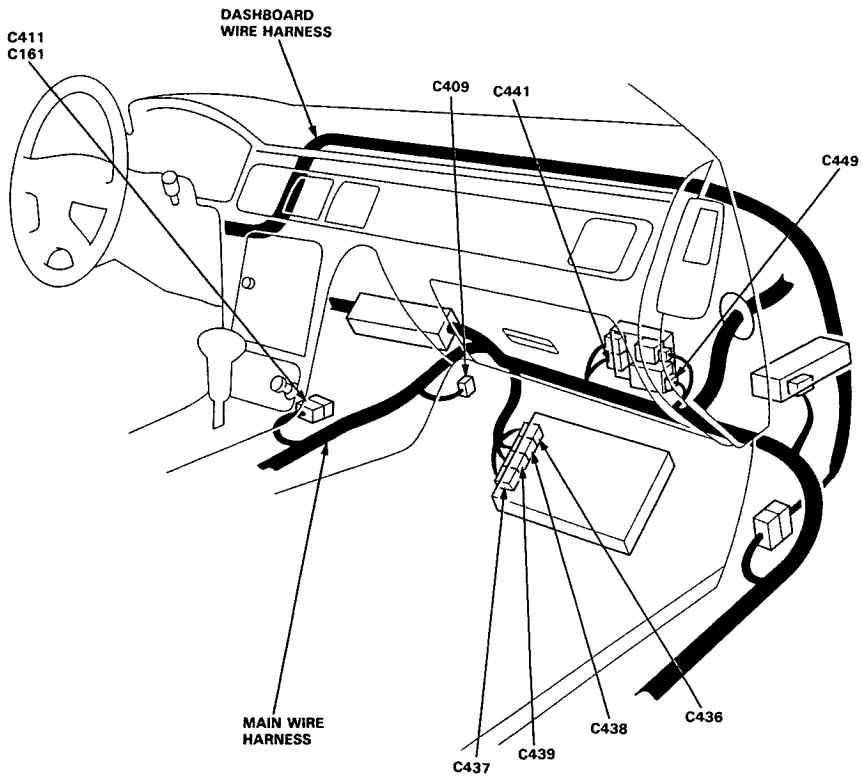

C409

①	BRN1
②	GRN/WHT3

C411 (A/T)

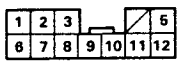

1	GRN/YEL	⑦	GRN/WHT
2	GRN/BLU	8	PNK
3	GRN/BLK	9	GRN/BLK
4	—	10	YEL
⑤	GRN	11	GRN/BLK
6	GRN/RED	12	ORN

C436

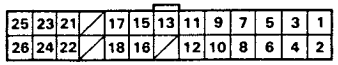

①	BRN	14	—
②	YEL	⑮	RED/BLU
③	RED1	⑯	WHT/GRN
④	GRN	⑰	BLU/RED
⑤	BLU	⑱	PNK (A/T)
⑥	PNK/WHT	19	—
⑦	GRN/BLK1	20	—
⑧	GRN/BLK2	㉑	YEL/GRN1
⑨	BLK/BLU	㉒	YEL/GRN2
⑩	ORN	㉓	BLK1
⑪	RED2	㉔	BLK2
⑫	LT GRN/YEL	㉕	YEL/BLK
⑬	GRN/RED	㉖	BLK/RED

C437

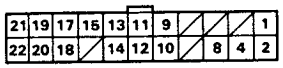

①	WHT/GRN	⑫	WHT/BLK
②	GRN/WHT1	⑬	YEL/GRN
3	—	⑭	WHT
④	BRN1	⑮	WHT/YEL
5	—	16	—
6	—	⑰	WHT/BLU
7	—	⑱	BLU/WHT (A/T)
⑧	BRN2	⑲	YEL/WHT1
⑨	WHT/RED	⑳	YEL/WHT2
⑩	GRN/RED	㉑	GRN/WHT2
⑪	RED/YEL	㉒	GRN/WHT3

C438

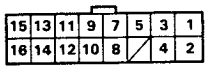

①	YEL/BLK	⑨	BLU/RED
②	BRN/BLK	⑩	ORN1
③	WHT/GRN (A/T)	⑪	ORN2
④	WHT/RED (A/T)	⑫	WHT
⑤	BLU/BLK	⑬	ORN/BLU
6	—	⑭	WHT/BLU
⑦	YEL/GRN	⑮	BLU/GRN
⑧	RED	⑯	BLU/YEL

C439

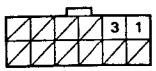

①	ORN/WHT	7	—
2	—	8	—
③	RED/BLU	9	—
4	—	10	—
5	—	11	—
6	—	12	—

C441 (A/T)

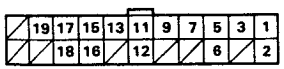

1	RED	12	WHT
2	GRN/WHT	⑬	WHT/GRN
③	WHT/BLU	14	—
4	—	15	WHT/BLU
⑤	YEL/GRN	⑯	PNK
6	BRN	17	ORN/BLU
⑦	RED/YEL	⑱	BLU/WHT
8	—	19	ORN
9	ORN	20	—
10	—	21	—
⑪	WHT/RED	22	—

C449

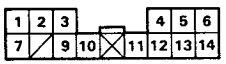

1	GRN/BLK	8	—
2	GRN/YEL	9	GRN/BLU
3	ORN/WHT	10	GRN
4	ORN	11	GRN/WHT
⑤	PNK	12	BLK
6	YEL	13	ORN/BLU
7	GRN/RED	14	BLK/YEL

NOTE: Different wires with the same color have been given a number suffix to distinguish them (for example YEL/BLK1 and YEL/BLK2 are not the same).
○: Related to Fuel and Emissions System.

(cont'd)

System Description

System Connectors [Dash and Floor] (cont'd)

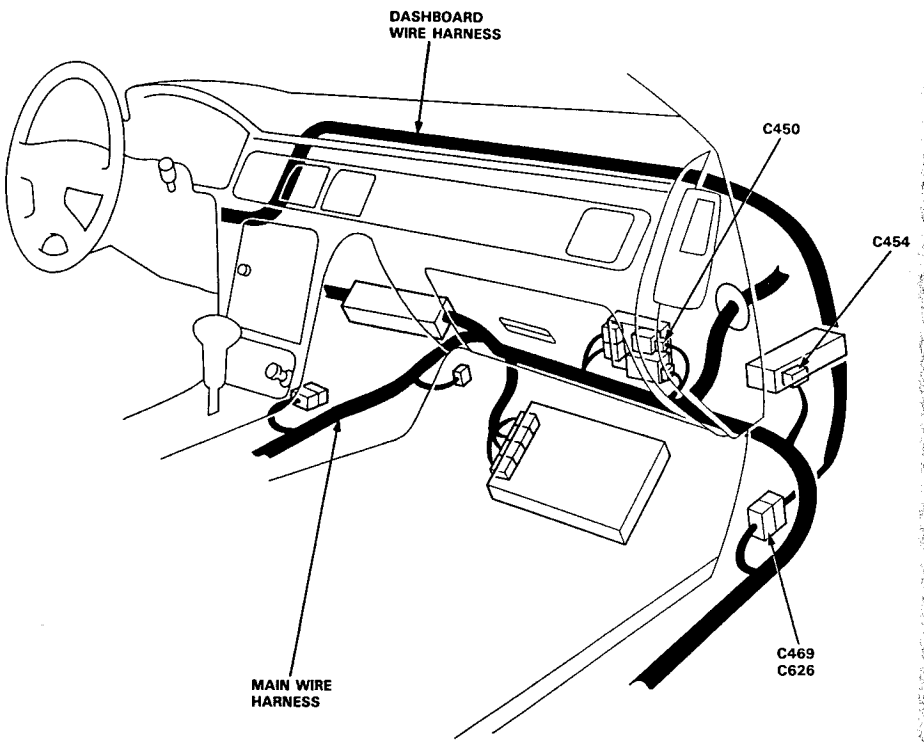

C450

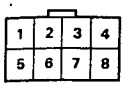

1	BLK	⑤	LT GRN/YEL
2	YEL/WHT	6	BLK/YEL
3	YEL/BLK	7	WHT/GRN
4	YEL	8	GRN

C454

①	RED/BLU
2	RED
3	YEL/BLK
4	YEL/BLK

C469

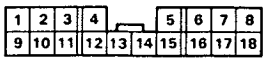

1	ORN (A/T)	10	GRN/RED (A/T)
2	GRN/YEL (A/T)	⑪	GRN/WHT (A/T)
3	GRN/BLU (A/T)	⑫	YEL/GRN (A/T)
4	PNK	13	GRN/BLK (A/T)
5	RED/BLU	14	RED/WHT (A/T)
6	ORN	15	WHT/GRN
⑦	GRN/RED	16	RED/GRN
8	BLU/RED	18	RED/YEL*
⑨	GRN (A/T)	17	WHT/GRN
		18	WHT/BLU

*: Canada

NOTE: Different wires with the same color have been given a number suffix to distinguish them (for example YEL/BLK$_1$ and YEL/BLK$_2$ are not the same).
O: Related to Fuel and Emissions System.

(cont'd)

System Description

System Connectors [Fuel Pump] (cont'd)

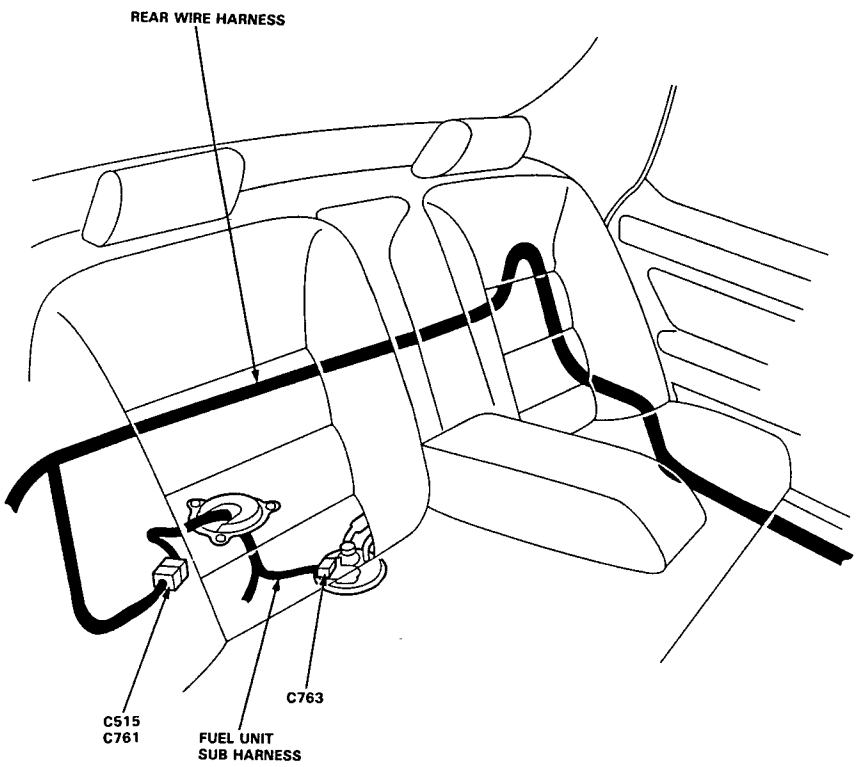

C515

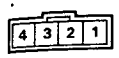

1	YEL
2	GRN/RED
3	YEL/WHT
4	BLK

C763

1	BLK
2	YEL

NOTE: Different wires with the same color have been given a number suffix to distinguish them (for example YEL/BLK$_1$ and YEL/BLK$_2$ are not the same).
O: Related to Fuel and Emissions System.

(cont'd)

Troubleshooting

Troubleshooting Guide

NOTE: Across each row in the chart, the systems that could be sources of a symptom are ranked in the order they should be inspected starting with ①. Find the symptom in the left column, read across to the most likely source, then refer to the page listed at the top of that column. If inspection shows the system is OK, try the next most likely system ②, etc.

PAGE / SYSTEM		PGM-FI									
		ENGINE CONTROL MODULE	HEATED OXYGEN SENSOR	MANIFOLD ABSOLUTE PRESSURE SENSOR	TOP DEAD CENTER/ CRANKSHAFT POSITION/ CYLINDER POSITION SENSOR	ENGINE COOLANT TEMPERA-TURE SENSOR	THROTTLE POSITION SENSOR	INTAKE AIR TEMPERA-TURE SENSOR	BARO-METRIC PRESSURE SENSOR	IGNITION OUTPUT SIGNAL	VEHICLE SPEED SENSOR
SYMPTOM		44	48, 50, 54	58, 62	64	66	68	70	72	74	76
MALFUNCTION INDICATOR LAMP (MIL) ** TURNS ON		or									
MALFUNCTION INDICATOR LAMP (MIL) ** BLINKS		or	or or	or	or or	6	7	10	13	15	17
ENGINE WON'T START		③			③					③	
DIFFICULT TO START ENGINE WHEN COLD		(BU)		③	②	①					
IRREGULAR IDLING	WHEN COLD FAST IDLE OUT OF SPEC	(BU)				③					
	ROUGH IDLE	(BU)		③							
	WHEN WARM RPM TOO HIGH	(BU)									
	WHEN WARM RPM TOO LOW	(BU)									
FREQUENT STALLING	WHILE WARMING UP	(BU)				③					
	AFTER WARMING UP	(BU)									
POOR PERFORM-ANCE	MISFIRE OR ROUGH RUNNING	(BU)		②	③						
	FAILS EMISSION TEST	(BU)	③	②							
	LOSS OF POWER	(BU)		③			②				

* If codes other then those listed above are indicated, count the number of blinks again. If the MIL is in fact blinking these codes, replace the ECM.

(BU) If the MIL is on while the engine is running, jump the service check connector. If no code is displayed (MIL stays on steady), the back-up system may be in operation.
Substitute a known-good ECM and recheck. If the indication goes away, replace the original ECM.

**USA:
MALFUNCTION INDICATOR LAMP (MIL)

CANADA:
CHECK ENGINE LIGHT

PGM-FI					IDLE CONTROL		FUEL SUPPLY				EMISSION CONTROL	
IGNITION TIMING ADJUSTER	ELECTRICAL LOAD DETECTOR	KNOCK SENSOR	A/T FI SIGNAL A	A/T FI SIGNAL B	IDLE AIR CONTROL VALVE	OTHER IDLE CONTROLS	FUEL INJECTORS	FUEL METERING	OTHER FUEL SUPPLY	INTAKE AIR	EXHAUST GAS RECIR-CULATION CONTROL SYSTEM	OTHER EMISSION CONTROLS
78	80	84	86	86	92	88	110	56	107	125	141	137
16	20	or	30	31	14		16	45			12	
							②		①			
					①	②						
					①		②				③	
					①	②						
	③				①		②					
					①	②			③			
					③				①		②	
							①				③	
								③				①
							③		①	③		

Troubleshooting

Self-diagnostic Procedures

I. When the Malfunction Indicator lamp (MIL) has been reported on, do the following:

1. Connect the service check connector terminals with a jumper wire as shown (the service check connector (2P) is located under the dash on the passenger side of the car). Turn the ignition switch on.

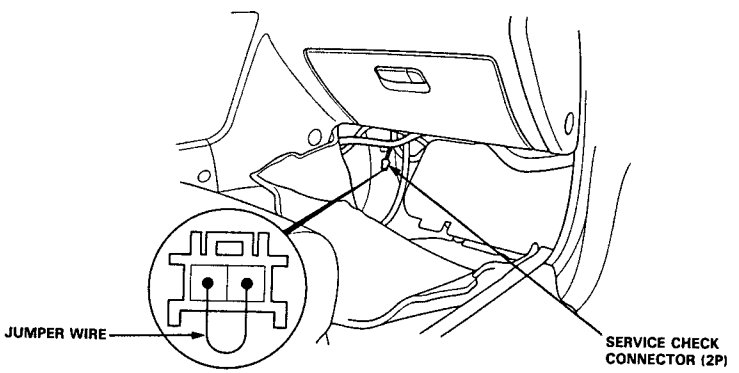

2. Note the Diagnositc Trouble Code (DTC): The MIL indicates a code by the length and number of blinks. The MIL can indicate simultaneous component problems by blinking separate codes, one after another. Codes 1 through 9 are indicated by individual short blinks. Codes 10 through 53 are indicated by a series of long and short blinks. The number of long blinks equals the first digit, the number of short blinks equals the second digit.

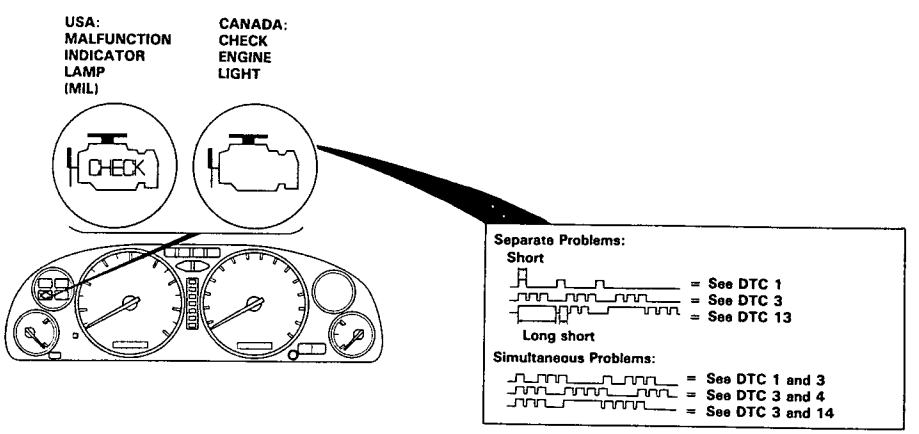

II. Engine Control Module (ECM)Reset Procedure

1. Turn the ignition switch off.

2. Remove the BACK UP (10 A) fuse from the under-hood fuse/relay box for 10 seconds to reset the ECM.

NOTE: Disconnecting the BACK UP fuse also cancels the radio preset stations and the clock setting. Make note of the radio presets before removing the fuse so you reset them.

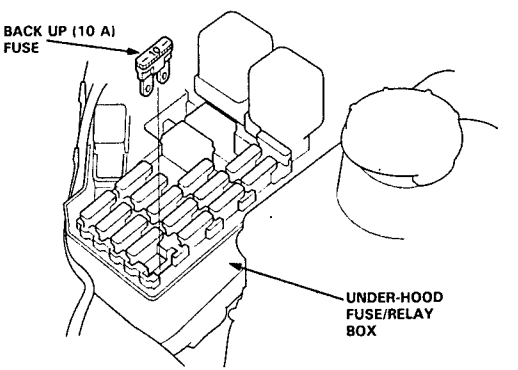

III. Final Procedure (this procedure must be done after any troubleshooting)

1. Remove the jumper wire.

NOTE: If the service check connector is jumped, the MIL will stay on.

2. Do the ECM Reset Procedure.

3. Set the radio preset stations and the clock setting.

(cont'd)

Self-diagnostic Procedures (cont'd)

DIAGNOSTIC TROUBLE CODE (DTC)	SYSTEM INDICATED	Page
0	ENGINE CONTROL MODULE (ECM)	11-44
1	HEATED OXYGEN SENSOR (HO2S)	11-48
3	MANIFOLD ABSOLUTE PRESSURE (MAP SENSOR)	11-58
5		11-62
4	CRANKSHAFT POSITION (CKP SENSOR)	11-64
6	ENGINE COOLANT TEMPERATURE (ECT SENSOR)	11-66
7	THROTTLE POSITION (TP SENSOR)	11-68
8	TOP DEAD CENTER POSITION (TDC SENSOR)	11-64
9	No. 1 CYLINDER POSITION (CYP SENSOR)	11-64
10	INTAKE AIR TEMPERATURE (IAT SENSOR)	11-70
12	EXHAUST GAS RECIRCULATION (EGR) SYSTEM	11-141
13	BAROMETRIC PRESSURE (BARO SENSOR)	11-72
14	IDLE AIR CONTROL (IAC VALVE)	11-92
15	IGNITION OUTPUT SIGNAL	11-74
16	FUEL INJECTOR	11-110
17	VEHICLE SPEED SENSOR (VSS)	11-76
18	IGNITION TIMING ADJUSTER	11-78
20	ELECTRICAL LOAD DETECTOR (ELD)	11-80
23	FRONT KNOCK SENSOR	11-84
30	A/T FI SIGNAL A	11-86
31	A/T FI SIGNAL B	11-86
41	HEATED OXYGEN SENSOR (HO2S) HEATER	11-50
43	FUEL SUPPLY SYSTEM	11-54
45	FUEL METERING	11-56
53	REAR KNOCK SENSOR	11-84

- If codes other than those listed above are indicated, verify the code. If the code indicated is not listed above, replace the ECM.
- The MIL may come on, indicating a system problem when, in fact, there is a poor or intermittent electrical connection. First, check the electrical connections, clean or repair connections if necessary.
- The MIL and D4 indicator light may light simultaneously when the self-diagnosis indicator blinks 3, 6, 7 and 17. Check the PGM-FI system according to the PGM-FI system troubleshooting, then recheck the D4 indicator light. If it lights, see page 14-50, 51.
- The MIL does not come on when there is a malfunction in the A/T FI signal or electrical load detector circuits. However, it will indicate the codes when the service check connector is jumped.

If the inspection for a particular failure code requires the test harness, remove the right door sill molding and the small cover on the right kick panel and pull the carpet back to expose the ECM. Unbolt the ECM cover. Connect the test harness. Check the system according to the procedure described for the appropriate code(s) listed on the following pages.

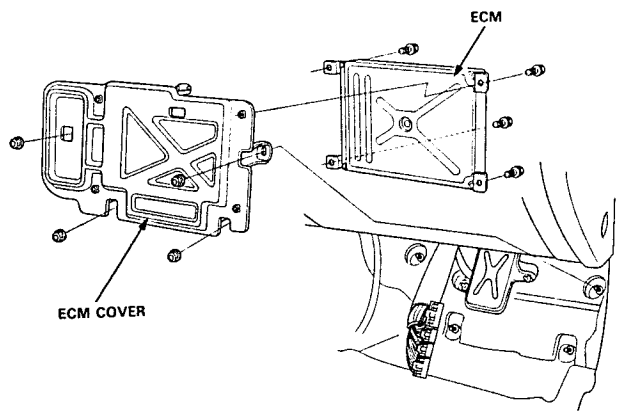

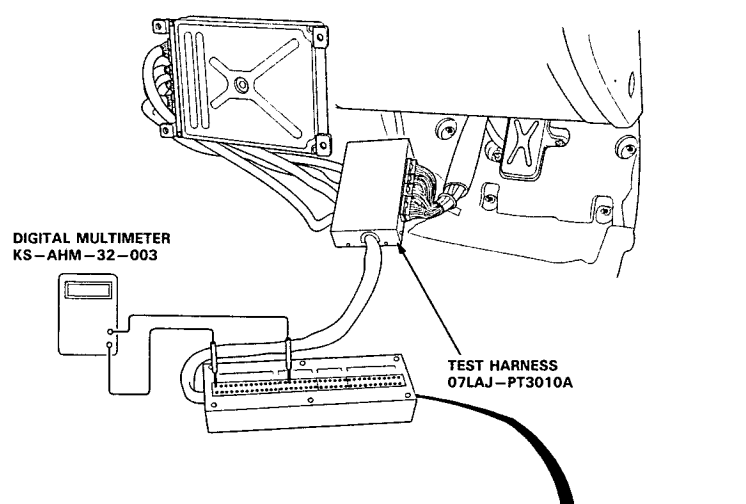

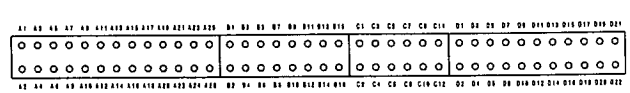

TERMINAL LOCATIONS

Self-diagnostic Procedures (cont'd)

CAUTION:
- **Puncturing the insulation on a wire can cause poor or intermittent electrical connections.**
- **For testing at connectors other than the test harness, bring the tester probe into contact with the terminal from the connector side of wire harness connectors in the engine compartment. For female connectors, just touch lightly with the tester probe and do not insert the probe.**

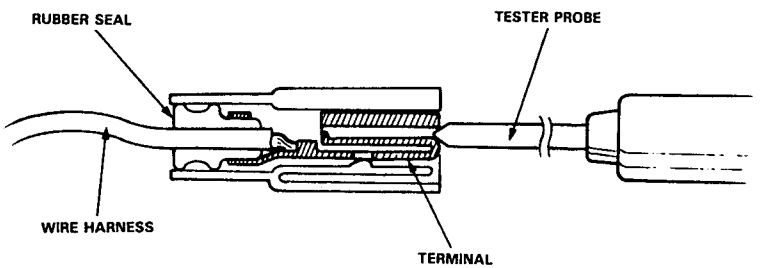

How to Read Flowcharts

A flowchart is designed to be used from start to final repair. It's like a map showing you the shortest distance. But beware: if you go off the "map" anywhere but a "stop" symbol, you can easily get lost.

START (bold type)	Describes the conditions or situation to start a troubleshooting flowchart.
ACTION	Asks you to do something; perform a test, set up a condition etc.
DECISION	Asks you about the result of an action, then sends you in the appropriate troubleshooting direction.
STOP (bold type)	The end of a series of actions and decisions, describes a final repair action and sometimes directs you to an earlier part of the flowchart to confirm your repair.

NOTE:
- The term " intermittent Failure" is used in these charts.It simply means a system may have had a failure, but it checks out OK at this time. If the Malfunction Indicator Lamp (MIL) on the dash does not come on, check for poor connections or loose wires at all connectors related to the circuit that you are troubleshooting (see illustration below).
- Most of the troubleshooting flowcharts have you reset the Engine Control Module (ECM) and try to duplicate the Diagnostic Trouble Code (DTC). If the problem is intermittent and you can't duplicate the code, do not continue through the flowchart. To do so will only result in confusion and, possibly, a needlessly replaced ECM.
- "Open" and "Short" are common electrical terms. An open is a break in a wire or at a connection. A short is an accidental connection of a wire to ground or to another wire. In simple electronics, this usually means something won't work at all. In complex electronics (like ECM's), this can sometimes mean something works, but not the way it's supposed to.
- If the electrical readings are not as specified when using the test harness, check the test harness connections before proceeding.

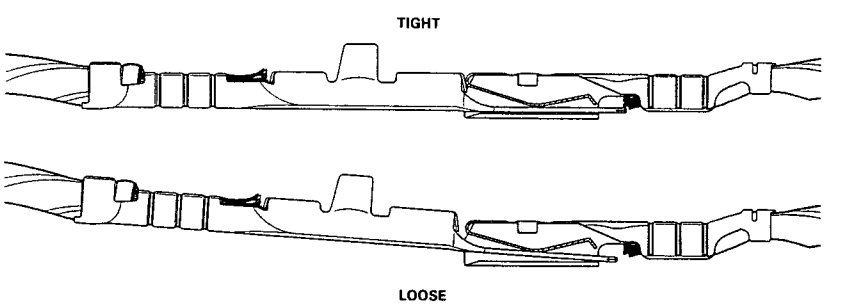

PGM-FI System

System Description

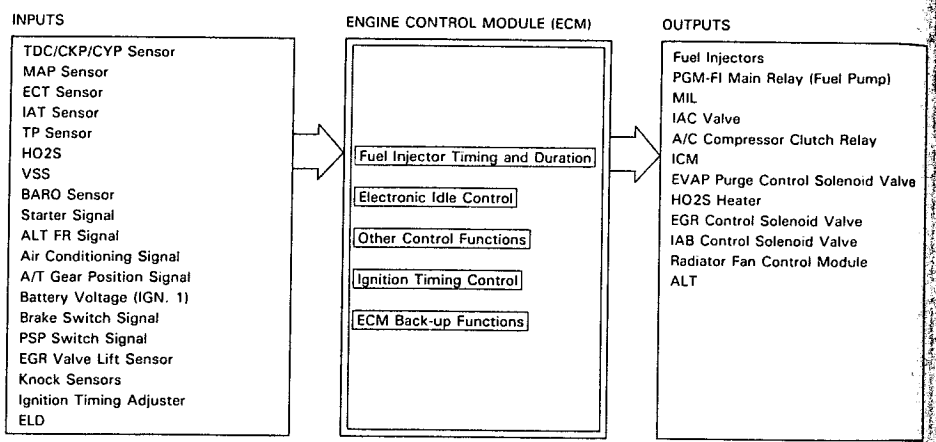

PGM-FI System
The PGM-FI system on this model is a sequential multiport fuel injection system.

Fuel Injector Timing and Duration
The ECM contains memories for the basic discharge durations at various engine speeds and manifold pressures. The basic discharge duration, after being read out from the memory, is further modified by signals sent from various sensors to obtain the final discharge duration.

Idle Air Control
Idle Air Control Valve (IAC Valve)
When the engine is cold, the A/C compressor is on, the transmission is in gear (A/T only) or the alternator is charging, the ECM controls current to the IAC Valve to maintain correct idle speed.

Ignition Timing Control
- The ECM contains memories for basic ignition timing at various engine speeds and manifold pressures. Ignition timing is also adjusted for engine coolant temperature.
- A Knock Control System is also used. When detonation is detected by the knock sensors, the ignition timing is retarded.

Other Control Functions
1. Starting Control
   When the engine is started, the ECM provides a rich mixture by increasing fuel injector duration.
2. Fuel Pump Control
   - When the ignition switch is initially turned on, the ECM supplies ground to the PGM-FI main relay that supplies current to the fuel pump for two seconds to pressurize the fuel system.
   - When the engine is running, the ECM supplies ground to the PGM-FI main relay that supplies current to the fuel pump.
   - When the engine is not running and the ignition is on, the ECM cuts ground to the PGM-FI main relay which cuts current to the fuel pump.
3. Fuel Cut-off Control
   - During deceleration with the throttle valve closed, current to the fuel injectors is cut off to improve fuel economy at speeds over 980 rpm (M/T) or 980 rpm (A/T).
   - Fuel cut-off action also takes place when engine speed exceeds, 7,100 rpm, regardless of the position of the throttle valve, to protect the engine from over-revving.
   - Fuel cut-off action also takes place when vehicle speed exceeds, 131 mph (210 km/h).

4. A/C Compressor Clutch Relay
   When the ECM receives a demand for cooling from the air conditioning system, it delays the compressor from being energized, and enriches the mixture to assure smooth transition to the A/C mode.

5. Evaporative Emission (EVAP) Purge Control Solenoid Valve
   When the engine coolant temperature is below 158°F (70°C), the ECM supplies a ground to the EVAP purge control solenoid valve which cuts vacuum to the EVAP purge control diaphragm valve.

6. Intake Air Bypass (IAB) Control Solenoid Valve
   When the engine rpm is below 4,900 rpm, the IAB control solenoid valve is activated by a signal from the ECM, intake air flows through the long intake path, then high torque is delivered. At speeds higher than 4,900 rpm, the solenoid valve is deactivated by the ECM, and intake air flows through the short intake path in order to reduce the resistance in airflow.

7. Exhaust Gas Recirculation (EGR) Control Solenoid Valve
   When the EGR is required for control of oxides of nitrogen (NOx) emissions, the ECM supplies ground to the EGR control solenoid valve which supplies regulated vacuum to the EGR valve.

8. Alternator (ALT) Control
   The system controls the voltage generated at the alternator in accordance with the electrical load and drive mode, and reduces the engine load to improve the fuel economy.

ECM fail-safe/back-up Functions
1. Fail-Safe Function
   When an abnormality occurs in a signal from a sensor, the ECM ignores that signal and assumes a pre-programmed value for that sensor that allows the engine to continue to run.

2. Back-up Function
   When an abnormality occurs in the ECM itself, the fuel injectors are controlled by a back-up circuit independent of the system in order to permit minimal driving.

3. Self-diagnosis Function [Malfunction Indicator Lamp (MIL)]
   When an abnormality occurs in a signal from a sensor, the ECM lights the MIL and stores the code in erasable memory. When the ignition is initially turned on, the ECM supplies ground for the MIL for two seconds to check the MIL bulb condition.

Troubleshooting Flowchart — Engine Control Module (ECM)

The Malfunction Indicator Lamp (MIL) never comes on (even for two seconds) after ignition is turned on.

Is the low oil pressure light on?
- NO → Inspect No. 1 BACK UP LIGHTS (10 A) fuse in the under-dash fuse/relay box.
  - Is the fuse OK?
    - NO → **Replace the fuse.**
    - YES → **Repair open in YEL between No. 1 BACK UP LIGHTS (10 A) fuse and gauge assembly.**
- YES ↓

Turn the ignition switch OFF.

Connect the test harness between the ECM and connectors (see page 11-39).

Connect A13 terminal to body ground.

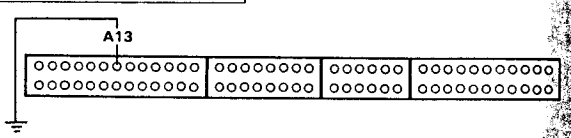

Turn the ignition switch ON.

Is the MIL on?
- NO → **– Replace the MIL bulb.**
  – Repair open in GRN/RED wire between ECM (A13) and gauge assembly.
- YES ↓

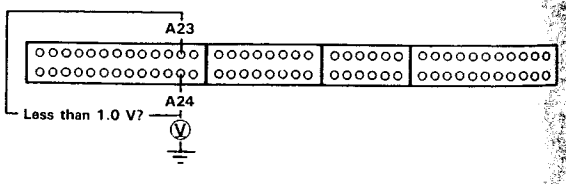

Measure voltage between body ground and the following terminals individually: A23, A24.

Is there less than 1.0 V?
- NO → **Repair open in wire(s) between ECM and G101 (located at left side of engine) that had more than 1.0 V.**
- YES ↓

Substitute a known-good ECM and recheck. If symptom/indication goes away, replace the original ECM.

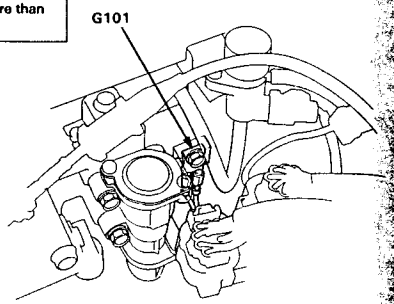

NOTE: When there is no code stored, the MIL will stay on if the service check connector is jumped.

The Malfunction Indicator Lamp (MIL) stays on or comes on after two seconds.

Connect the service check connector terminals with a jumper wire (see page 11-36).

Turn the ignition switch ON.

Does the MIL indicate any Diagnostic Trouble Code (DTC)?
- YES → **Go to self-diagnostic procedures (see page 11-34).**
- NO ↓

Remove the jumper wire from the service check connector terminals.

Try to start the engine.

Did the engine start?
- YES ↓
- NO ↓

Turn the ignition switch OFF.

Connect the test harness between the ECM and connectors (see page 11-39).

Turn the ignition switch ON.

Measure voltage between D4 (+) terminal and D22 (−) terminal.

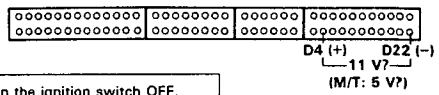

Is there approx. 11 V (M/T model: 5V)?
- YES → Connect the service check connector terminals with a jumper wire.
  - Measure voltage between D4 (+) terminal and D22 (−) terminal.
  - Is there approx. 11 V (M/T model: 5 V)?
    - NO → Remove the jumper wire from the service check connector terminals.
    - → (To page 11-46)
- NO → **Repair short to body ground in BRN wire between the ECM (D4), Transmission Control Module (TCM), ABS control unit and service check connector.**
  - * **– Repair open in BRN wire between ECM (D4) and service check connector.**
    – Repair open in GRN/WHT wire between service check connector and ECM (D22).
    - YES → Is there approx. 11 V (M/T model: 5 V)? (as above)

Remove and inspect the ECU (ECM) (10 A) fuse in the underhood fuse/relay box.

Is the fuse OK?
- NO → **Replace the fuse.**
- YES ↓

(To page 11-46)

*NOTE: After repair, disconnect the service check connector jumper wire, test drive the car, and recheck the MIL for a code.

(cont'd)

Troubleshooting Flowchart — Engine Control Module (ECM) (cont'd)

(From page 11-45)

Inspect the No. 2 ECU (ECM) (15 A) fuse in the under-dash fuse/relay box.

Is the fuse OK?
- NO → Replace the fuse.
- YES ↓

Turn the ignition switch ON.

Disconnect the 3P connector of each sensor one at a time:
- MAP sensor
- Throttle Position (TP) sensor
- Exhaust Gas Recirculation (EGR) valve lift sensor

Does the MIL remain ON?
- NO → Replace the sensor that caused the light to go out.
- YES ↓

Connect the service check connector terminals with a jumper wire.

Disconnect the 3P connector of the ignition timing adjuster.

Does the MIL indicate code 18?
- YES → Replace the ignition timing adjuster.
- NO ↓

Turn the ignition switch OFF.

Remove the jumper wire from the service check connector terminals.

Connect the test harness (see page 11-39).
Disconnect the "D" connector from the ECM only, not the main wire harness.

Check for continuity between body ground terminals D19, D20.

(To page 11-47)

(From page 11-45)

Turn the ignition switch OFF.

Disconnect "A" connector from the ECM.

Turn the ignition switch ON.

Is the MIL ON?
- NO → Substitute a known-good ECM and recheck. If symptom/indication goes away, replace the original ECM.
- YES ↓

Repair short to body ground in GRN/RED wire between the ECM (A13) and the MIL.

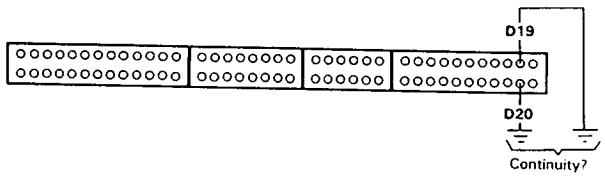

(From page 11-46)

Is there continuity?
- YES → Repair short to body ground in YEL/WHT wire between ECM (D19, D20) and TP sensor, EGR valve lift sensor, MAP sensor and ignition timing adjuster.
- NO ↓

Reconnect all the sensor connectors.
Reconnect the "D" connector to the ECM.

Turn the ignition switch ON.

Measure voltage between body ground and the following terminal individually: A26, B2.

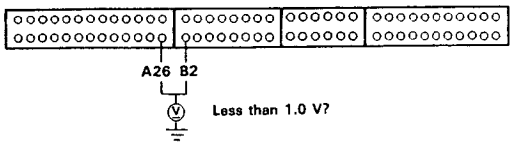

Is there less than 1.0 V?
- NO → Repair open in BLK/RED (A26) or BRN/BLK (B2) and G101 (located at left side of engine).
- YES ↓

Measure voltage between A26 (−) and the following: B1 (+) and A25 (+).

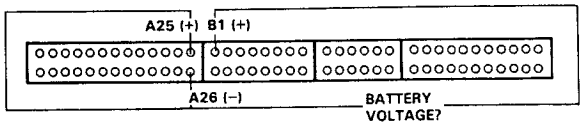

Is there battery voltage?
- NO → Repair open in YEL/BLK wire between ECM (A25, B1) and PGM-FI main relay.
  Check PGM-FI main relay and wiring connectors at PGM-FI main relay.
- YES ↓

Substitute a known-good ECM and recheck. If symptom/indication goes away, replace the original ECM.

PGM-FI System

Troubleshooting Flowchart — Heated Oxygen Sensor (HO2S)

The Malfunction Indicator Lamp (MIL) indicates Diagnostic Trouble Code (DTC) 1: A problem in the Heated Oxygen Sensor (HO2S) circuit.

The Heated Oxygen Sensor (HO2S) detects the oxygen content in the exhaust gas and signals the ECM. In operation, the ECM receives the signals from the sensor and varies the duration during which fuel is injected. The Heated Oxygen Sensor (HO2S) has an internal heater. The heater stabilizes the sensor's output. The Heated Oxygen Sensor (HO2S) is installed in the exhaust manifold.

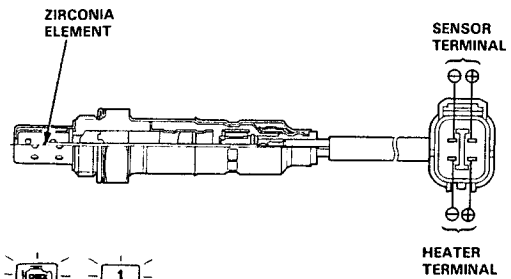

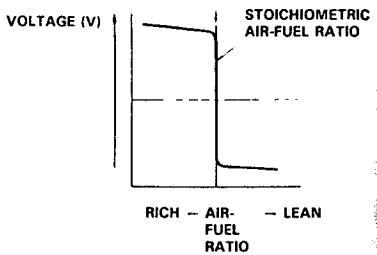

- The MIL has been reported on.
- With service check connector jumped (see page 11-36), code 1 is indicated.

Do the ECM Reset Procedure (see page 11-37).

Warm up engine to normal operating temperature (the radiator fan comes on).

Run engine for 60 seconds.

Road test with the automatic transmission in 2 position (M/T: 4th gear).
Starting at 1,600 rpm, accelerate using wide open throttle for at least 5 seconds. Then decelerate for at least 5 seconds with the throttle completely closed.

Is the MIL on and does it indicate code 1?

NO → Intermittent failure, system is OK at this time. Check for poor connections or loose wires at the C202 (HO2S) and ECM.

YES → Go to page 11-54 and perform test for code 43.

Troubleshooting Flowchart — Heated Oxygen Sensor (HO2S) Heater

The Malfunction Indicator Lamp (MIL) indicates Diagnostic Trouble Code (DTC) 41: A problem in the Heated Oxygen Sensor (HO2S) Heater circuit.

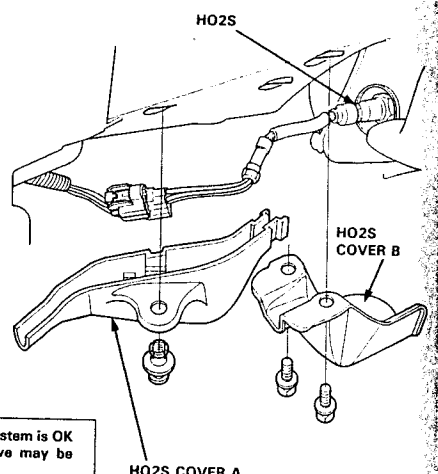

41

- Engine is running.
- The MIL has been reported on. With service check connector jumped (see page 11-36), code 41 is indicated.

Do the ECM Reset Procedure (see page 11-37).

Start the engine.

Is the MIL on and does it indicate code 41?

NO → Intermittent failure, system is OK at this time (test drive may be necessary). Check for poor connections or loose wires at C202 (HO2S) and ECM.

YES

Turn the ignition switch OFF.

Remove the HO2S covers.

Disconnect the 4P connector from the HO2S.

Measure resistance between terminals C and D on the HO2S.

Is there 10–40 Ω?

NO → Replace the HO2S.

YES

(To page 11-51)

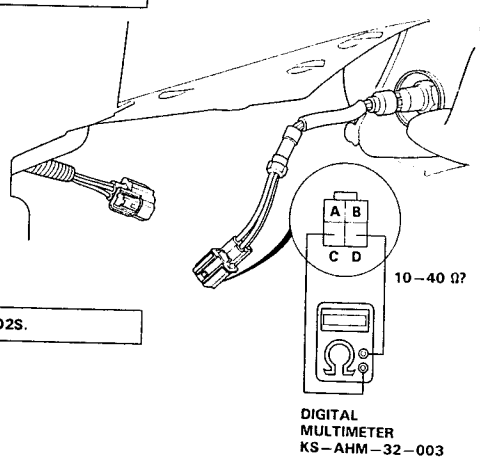

(From page 11-50)

Check for continuity to body ground on each terminal on the HO2S.

Is there continuity?

YES → Replace the HO2S.

NO

Check for continuity between terminal D and terminals A and B individually.

Is there continuity?

YES → Replace the HO2S.

NO

Turn the ignition switch ON.

At the HO2S harness, measure voltage between YEL/BLK (+) terminal and PNK/WHT (–) terminal.

Is there battery voltage?

YES → Turn the ignition switch OFF.

NO

Measure voltage between YEL/BLK (+) terminal and body ground.

Is there battery voltage?

NO → Repair open in YEL/BLK wire between HO2S and PGM-FI main relay.

YES

Turn the Ignition switch OFF.

(To page 11-52)

Disconnect the "A" connector from the ECM.

Turn the ignition switch ON.

At the HO2S harness, measure voltage between YEL/BLK (+) terminal and PNK/WHT (–) terminal.

Is there battery voltage?

YES → Repair short in PNK/WHT wire between ECM (A6) and HO2S.

NO

Turn the ignition switch OFF.

Reconnect the HO2S connector.

(To page 11-52)

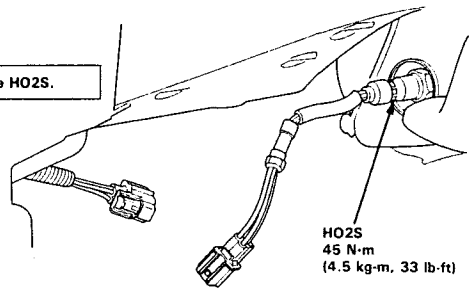

(cont'd)

Troubleshooting Flowchart — Heated Oxygen Sensor (HO2S) Heater (cont'd)

(From page 11-51)

Reconnect the 4P connector to the HO2S.

Connect the test harness "A" connector to the main wire harness only, not the ECM (see page 11-39).

Turn the ignition switch ON.

Measure voltage between A6 (+) terminal and A23 (−) terminal.

Is there battery voltage?

NO → **Repair open in PNK/WHT wire between ECM (A6) and HO2S.**

YES → **Substitute a known-good ECM and recheck. If symptom/indication goes away, replace the original ECM.**

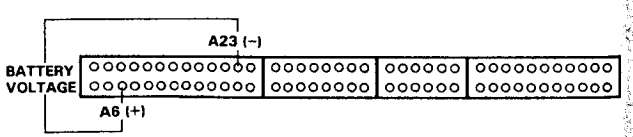

(From page 11-51)

Connect the test harness "A" connector to the main wire harness only, not the ECM (see page 11-39).

Connect an ammeter between terminals A6 (+) and A26 (−)

Turn the ignition switch ON.

* Monitor over a 5 minutes period.

Is the current less than 0.1 A?*

YES → **Replace the HO2S.**

NO → **Substitute a known-good ECM and recheck. If symptom/indication goes away, replace the original ECM.**

Troubleshooting Flowchart — Fuel Supply System

The Malfunction Indicator Lamp (MIL) indicates Diagnostic Trouble Code (DTC) 43: A problem in the Heated Oxygen Sensor (HO2S) circuit or a problem in the Fuel Supply System.

43

43

- The MIL has been reported on.
- With service check connector jumped (see page 11-36), code 43 is indicated.

Is the code 43 accompanied by the MIL and poor driveability? — YES → Go to Fuel Supply System (see page 11-107).

NO

Do the ECM Reset Procedure (see page 11-37).

Warm up engine to normal operating temperature (the radiator fan comes on).

Hold engine at 3,000 rpm for two minutes. (A/T: Transmission in N or P position.)

Is the MIL on and does it indicate code 43? — NO → Intermittent failure, system is OK at this time (test drive may be necessary). Check for poor connections or loose wires at C202 (HO2S) and ECM.

YES

From code 1 trouble-shooting (page 11-48).

Turn the ignition switch OFF.

Connect the test harness between the ECM and connectors (see page 11-39).

With the ignition switch OFF, wait for at least two minutes.

Install a jumper wire on the test harness between A6 and A26.

Turn the ignition switch ON.

Measure voltage between D14 (+) terminal and A26 (−) terminal as soon as the ignition switch is turned on.

(To page 11-55)

NOTE:
- Use DIGITAL MULTIMETER (KS—AHM—32—003)or equivalent.
- Use 2 Volt range.

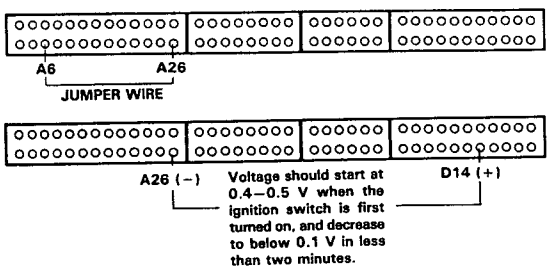

(From page 11-54)

Is there 0.1 V or less when the ignition switch is first turned on? — YES → Remove the HO2S covers.

NO

Remove the HO2S covers.

Disconnect the 4P connector from the HO2S.

Measure voltage between D14 (+) terminal and A26 (−) terminal.

Is there more than 0.1 V? — YES → Replace the HO2S.

NO

Disconnect the 4P connector from the HO2S.

Disconnect the "D" connector from the main wire harness.

Measure voltage between D14 (+) terminal and A26 (−) terminal.

Is there more than 0.1 V? — YES → Repair short in WHT wire between ECM (D14) and HO2S.

NO

Measure voltage at the engine wire harness side of the HO2S connector between GRN/WHT (−) and WHT (+).

Substitute a known-good ECM and recheck. If symptom/indication goes away, replace the original ECM.

Is there more than 0.1 V? — YES → Reconnect the 4P connector to the HO2S.

NO

Check for an open in WHT wire between ECM (D14) and HO2S. If wire is OK, repair open in GRN/WHT wire between ECM (D22) and HO2S.

Warm up engine to normal operating temperature (the radiator fan comes on).

Hold engine at 3,000 rpm for two minutes (A/T: Transmission in N or P position).

Measure voltage between D14 (+) terminal and A26 (−) terminal.

Is the voltage avobe 0.5 V at wide open and below 0.5 V when the throttle released? — NO → Replace the HO2S.

YES

Go to Fuel Supply System (see page 11-107).

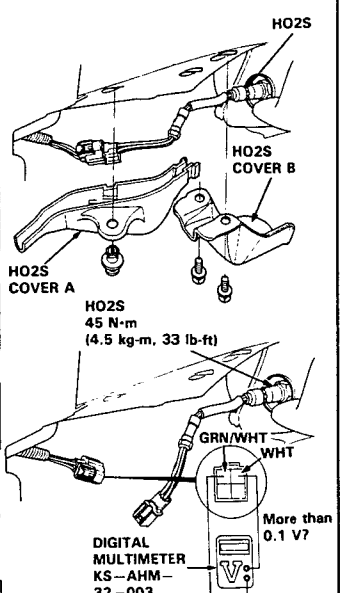

PGM-FI System

Troubleshooting Flowchart — Fuel Metering System

The Malfunction Indicator Lamp (MIL) indicates Diagnostic Trouble Code (DTC) 45: A problem in the Fuel Metering System.

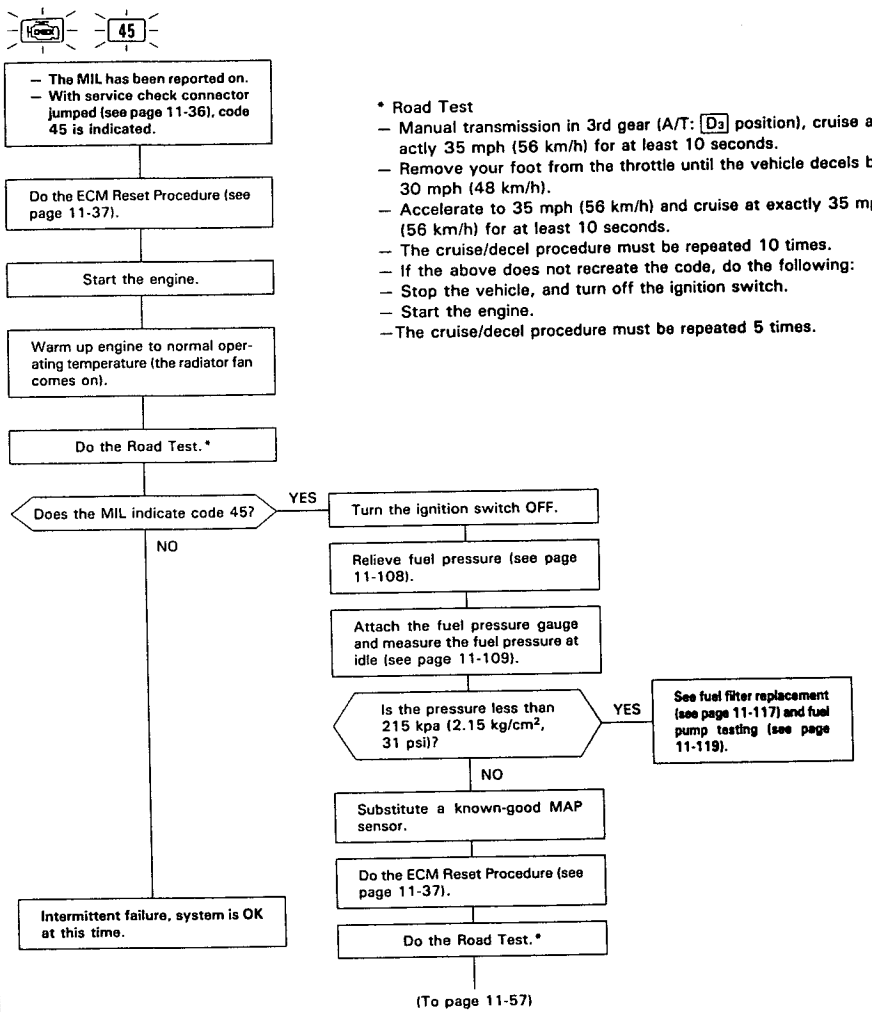

* Road Test
- Manual transmission in 3rd gear (A/T: D3 position), cruise at exactly 35 mph (56 km/h) for at least 10 seconds.
- Remove your foot from the throttle until the vehicle decels below 30 mph (48 km/h).
- Accelerate to 35 mph (56 km/h) and cruise at exactly 35 mph (56 km/h) for at least 10 seconds.
- The cruise/decel procedure must be repeated 10 times.
- If the above does not recreate the code, do the following:
- Stop the vehicle, and turn off the ignition switch.
- Start the engine.
- The cruise/decel procedure must be repeated 5 times.

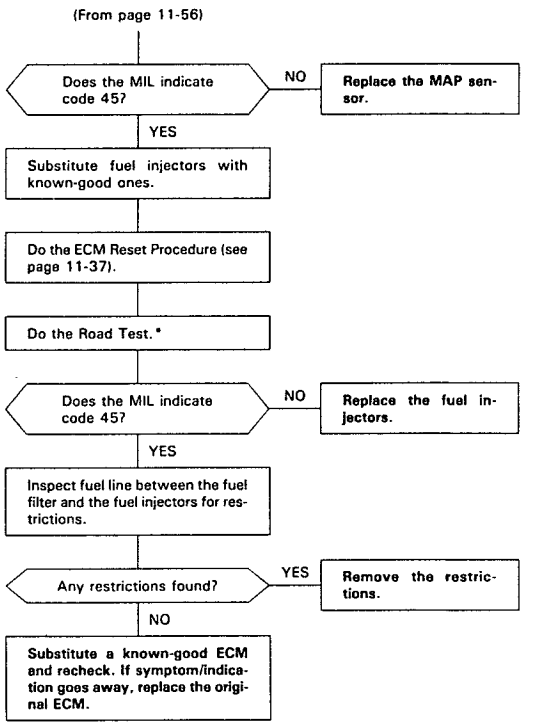

PGM-FI System

Troubleshooting Flowchart —Manifold Absolute Pressure (MAP) Sensor

3 — The Malfunction Indicator Lamp (MIL) indicates Diagnostic Trouble Code (DTC) 3: An electrical problem in the Manifold Absolute Pressure (MAP) Sensor system.

5 — The Malfunction Indicator Lamp (MIL) indicates Diagnostic Trouble Code (DTC) 5: A mechanical problem (vacuum leak) in the Manifold Absolute Pressure (MAP) Sensor System.

The MAP sensor converts manifold absolute pressure into electrical signals and inputs the ECM.

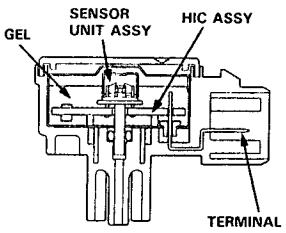

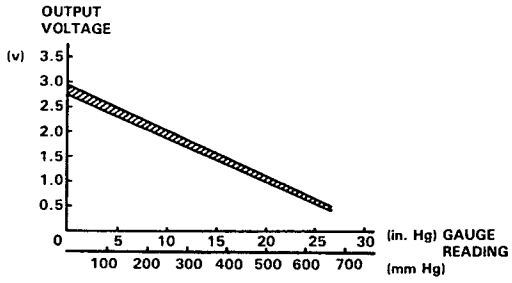

3

- Engine is warm and running.
- The MIL has been reported on.
- With service check connector jumped (see page 11-36), code 3 is indicated.

Do the ECM Reset Procedure (see page 11-37).

Start the engine and allow it to idle.

Is the MIL on and does it indicate code 3?

NO → Intermittent failure, system is OK at this time (test drive may be necessary). Check for poor connections or loose wires at C329 (MAP sensor) and ECM.

YES

Turn the ignition switch OFF.

Disconnect the 3P connector from the MAP sensor.

Turn the ignition switch ON.

(To page 11-59)

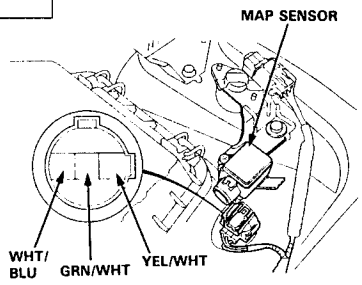

(From page 11-58)

Measure voltage between YEL/WHT (+) terminal and body ground.

Is there approx. 5V?

YES → Measure voltage between YEL/WHT (+) terminal and GRN/WHT (−) terminal.

Is there approx. 5V?

NO → Repair open in GRN/WHT wire between ECM (D21) and MAP sensor.

YES

NO

Turn the ignition switch OFF.

Connect the test harness "D" connector to the ECM only, not to the main wire harness (see page 11-39).

Turn the ignition switch ON.

Measure voltage between D19 (+) terminal and D21 (−) terminal

Is there approx. 5 V?

YES → Measure voltage between WHT/BLU (+) terminal and GRN/WHT (−) terminal.

NO

Repair open in YEL/WHT wire between ECM (D19) and MAP sensor.

Substitute a known-good ECM and recheck. If symptom/indication goes away, replace the original ECM.

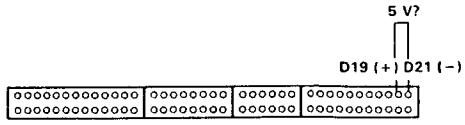

A/T only

Turn the ignition switch OFF.

Disconnect the 22P connector from the TCM.

Turn the ignition switch ON.

Is there approx. 5V?

YES

Replace the TCM.

NO

Is there approx. 5 V?

YES

Turn the ignition switch OFF.

Reconnect the 3P connector to the MAP sensor.

Connect the test harness between the ECM and connector (see page 11-39).

Turn the ignition switch ON.

(To page 11-60)

(To page 11-60)

(cont'd)

Troubleshooting Flowchart — Manifold Absolute Pressure (MAP) Sensor (cont'd)

(From page 11-59)

Turn the ignition switch OFF.

Connect the test harness "D" connector to the ECM only, not to the main wire harness (see page 11-39).

Turn the ignition switch ON.

Measure voltage between D17 (+) terminal and D21 (−) terminal.

Is there approx. 5 V?

YES

- Repair short in WHT/BLU wire between ECM (D17), TCM (A/T) and MAP sensor.
- Repair open in WHT/BLU wire between ECM (D17) and MAP sensor.

NO

Substitute a known-good ECM and recheck. If prescribed voltage is now available, replace the original ECM.

(From page 11-59)

Measure voltage between D17 (+) terminal and D21 (−) terminal.

Is there approx. 3 V?

NO

Replace the MAP sensor.

YES

Substitute a known-good ECM and recheck. If symptom/indication goes away, replace the original ECM.

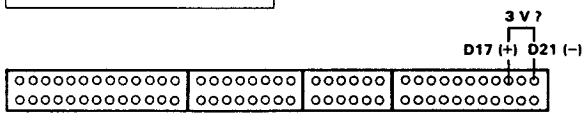

Troubleshooting Flowchart — Manifold Absolute Pressure (MAP) Sensor

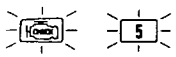

- The MIL has been reported on.
- With service check connector jumped (see page 11-36), code 5 is indicated.

Do the ECM Reset Procedure (see page 11-37).

Start the engine and keep engine speed at 2,000 rpm for one minute with manual transmission in neutral (A/T: P or N position).

Is the MIL on and does it indicate code 5?

NO:
- Intermittent failure, system is OK at this time (test drive may be necessary).
- Check vacuum hoses, pipes and connections.
- Make sure all connectors are secure.

YES:

Turn the ignition switch OFF.

Disconnect #21 hose from the throttle body, connect vacuum pump to the hose and apply vacuum.

Does it hold vacuum?

NO: Connect a vacuum pump to the MAP sensor and apply vacuum.

Does it hold vacuum?

NO: Replace the MAP sensor.

YES: Repair vacuum leak in hose routing between MAP sensor and intake manifold.

YES: Connect a T-fitting from a vacuum gauge between the throttle body base and #21 hose.

(To page 11-63)

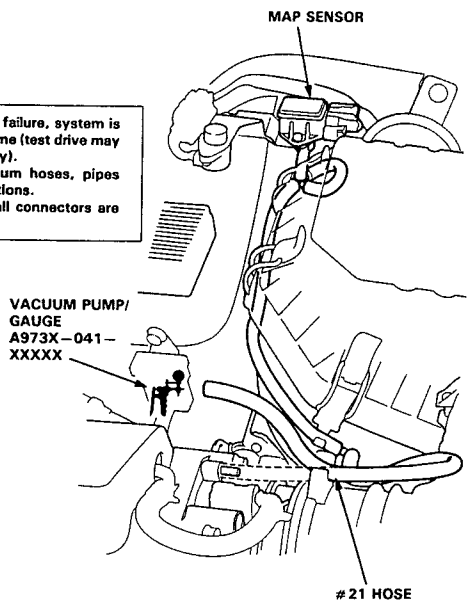

(From page 11-62)

Start the engine.

Is there manifold vacuum?

NO: Remove restriction from throttle body.

YES:

Turn the ignition switch OFF.

Connect the test harness between the ECM and connectors (see page 11-39).

Turn the ignition switch ON.

Measure voltage between D17 (+) terminal and D21 (−) terminal.

Is there approx. 3 V?

NO: Replace the MAP sensor.

YES:

Start the engine and allow it to idle.

Is there approx. 1 V?

NO: Replace the MAP sensor.

YES: Substitute a known-good ECM and recheck. If symptom/indication goes away, replace the original ECM.

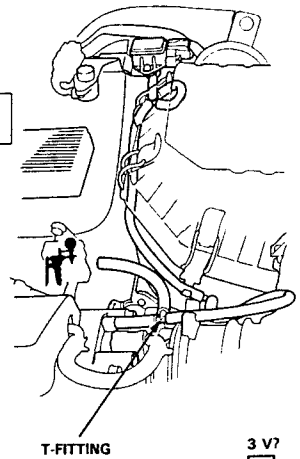

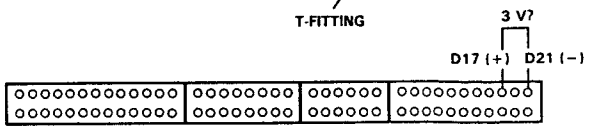

Troubleshooting Flowchart — TDC/CKP/CYP Sensor

4 — The Malfunction Indicator Lamp (MIL) indicates Diagnostic Trouble Code (DTC) 4: A problem in the Crankshaft Position (CKP) Sensor circuit.

8 — The Malfunction Indicator Lamp (MIL) indicates Diagnostic Trouble Code (DTC) 8: A problem in the Top Dead Center (TDC) Sensor circuit.

9 — The Malfunction Indicator Lamp (MIL) indicates Diagnostic Trouble Code (DTC) 9: A problem in the Cylinder Position (CYP) Sensor circuit.

The CKP Sensor determines timing for fuel injection and ignition of each cylinder and also detects engine speed. The TDC Sensor determines ignition timing at start-up (cranking) and when crank angle is abnormal. The CYP Sensor detects the position of No. 1 cylinder for sequential fuel injection to each cylinder.

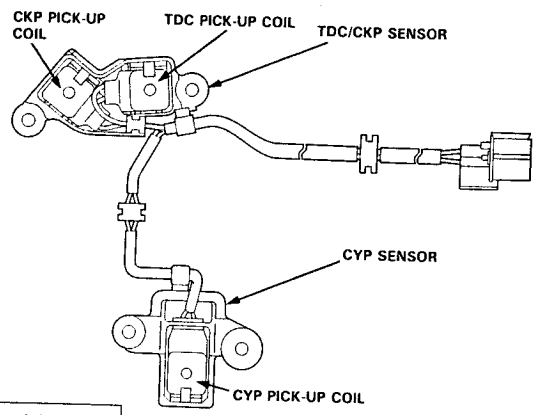

4 or 8 or 9

- The MIL has been reported on.
- With service check connector jumped (see page 11-36), code 4, 8 and/or 9 are indicated.

Do the ECM Reset procedure (see page 11-37).

Start the engine.

Is the MIL on and does it indicate code 4, 8 or 9?

NO → Intermittent failure, system is OK at this time (test drive may be necessary). Check for poor connections or loose wires at C308 (located at left shock tower), C117 (TDC/CKP/CYP sensor) and ECM.

YES

Turn the ignition switch OFF.

Disconnect the 6P connector from the TDC/CKP/CYP sensor.

(To page 11-65)

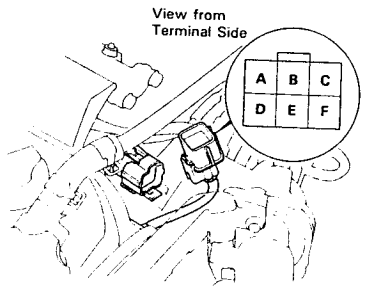

(From page 11-64)

Measure resistance between terminals of the indicated sensor. *see table

Is there 650–850 Ω?

NO → Replace the TDC/CKP/CYL sensor (see section 6).

YES

Check for continuity to body ground on all terminals individually.

Is there continuity?

YES → Replace the TDC/CKP/CYL sensor (see section 6).

NO

Reconnect the connector.

Connect the test harness to the main wire harness only, not to the ECM (see page 11-39).

Measure resistance between terminals of the indicated sensor on test harness. *see table

Is there 650–850 Ω?

NO → Repair open in the indicated sensor wires. *see table

YES

Check for continuity to body ground on, B13 or B11 terminals.

Is there continuity?

YES → Repair short in the indicated sensor wires. *see table

NO

Substitute a known-good ECM and recheck. If symptom/indication goes away, replace the original ECM.

*:

SENSOR	DTC	SENSOR TERMINAL	ECM TERMINAL	WIRE COLOR
CKP	4	B	B16	BLU/YEL
		E	B15	BLU/GRN
TDC	8	A	B14	WHT/BLU
		D	B13	ORN/BLU
CYP	9	C	B12	WHT
		F	B11	ORN

CKP:

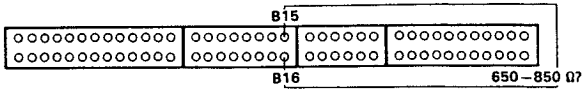

TDC:

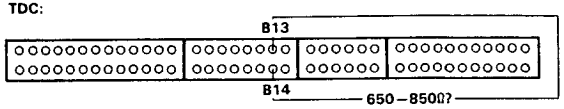

CYP:

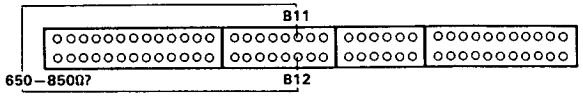

Troubleshooting Flowchart — Engine Coolant Temperature (ECT) Sensor

The Malfunction Indicator Lamp (MIL) indicates Diagnostic Trouble Code (DTC) 6: A problem in the Engine Coolant Temperature (ECT) Sensor circuit.

The ECT Sensor is a temperature dependant resistor (thermistor). The resistance of the thermistor decreases as the engine coolant temperature increases as shown below.

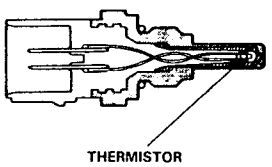

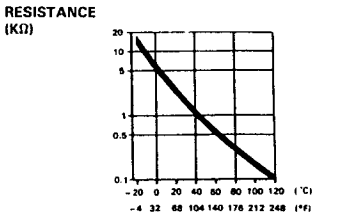

- The MIL has been reported on.
- With service check connector jumped (see page 11-36), code 6 is indicated.

Do the ECM Reset Procedure (see page 11-37).

Turn the ignition switch ON.

Is the MIL on and does it indicate code 6?

NO → Intermittent failure, system is OK at this time (test drive may be necessary). Check for poor connections or loose wires at C219 (located under the hood on the front right side of the car), C127 (ECT sensor) and ECM.

YES

Warm up engine to normal operating temperature (the radiator fan comes on).

Turn the ignition switch OFF.

Disconnect the 2P connector from the ECT sensor.

Measure resistance between the 2 terminals on the ECT sensor.

Is there 200–400 Ω?

NO → Replace the ECT sensor.

YES

(To page 11-67)

(From page 11-66)

Turn the ignition switch ON.

Measure voltage between YEL/GRN and body ground.

Is there approx. 5 V?

YES → Measure voltage between YEL/GRN (+) terminal and GRN/WHT (−) terminal.

Is there approx. 5 V?

NO → Repair open in GRN/WHT wire between ECM (D22) and ECT sensor.

YES → Substitute a known-good ECM and recheck. If symptom/indication goes away, replace the original ECM.

NO

Turn the ignition switch OFF.

A/T only

Disconnect the 22P connector from TCM.

Turn the ignition switch ON.

Is there approx. 5 V?

YES → Replace the TCM.

NO

turn the ignition switch OFF.

Connect the test harness "D" connector to the ECM only, not to the main wire harness (see page 11-39).

Turn the ignition switch ON.

Measure voltage between D13 (+) terminal and D22 (−) terminal.

Is there approx. 5 V?

YES → Repair open or short in YEL/GRN wire between ECM (D13), TCM and ECT sensor.

NO

Substitute a known-good ECM and recheck. If symptom/indication goes away, replace the original ECM.

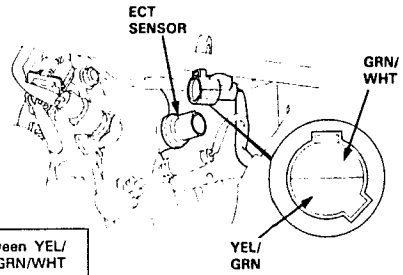

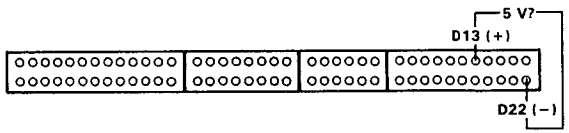

Troubleshooting Flowchart — Throttle Position (TP) Sensor

The Malfunction Indicator Lamp (MIL) indicates Diagnostic Trouble Code (DTC) 7: A problem in the Throttle Position (TP) Sensor circuit.

The TP Sensor is a potentiometer. It is connected to the throttle valve shaft. As the throttle position changes, the TP Sensor varies the voltage signal to the ECM.

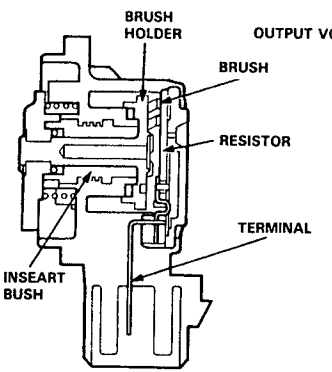

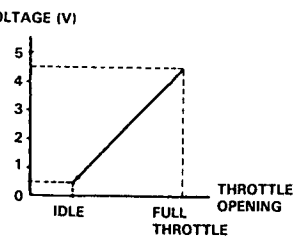

- Engine is running.
- The MIL has been reported on.
- With service check connector jumped (see page 11-36), code 7 is indicated.

Do the ECM Reset Procedure (see page 11-37).

Start the engine.

Is the MIL on and does it indicate code 7?

NO → Intermittent failure, system is OK at this time (test drive may be necessary). Check for poor connections or loose wires at C219 (located under the hood on the front right side of the car), C124 (TP sensor) and ECM.

YES

Turn the ignition switch OFF.

Disconnect the 3P connector from the TP sensor.

Turn the ignition switch ON.

Measure voltage between YEL/WHT (+) terminal and GRN/WHT (−) terminal.

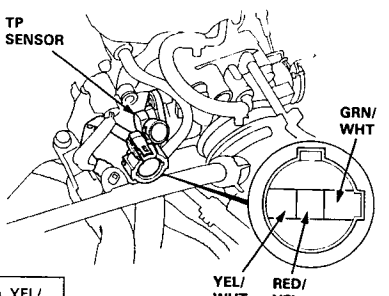

Is there approx. 5 V?

NO → Measure voltage between YEL/WHT (+) terminal and body ground.

YES

(To page 11-69)

(To page 11-69)

(From page 11-68)

Turn the ignition switch OFF.

Reconnect the 3P connector.

Connect the test harness between the ECM and connectors (see page 11-39).

Turn the ignition switch ON.

Measure voltage between D11 (+) terminal and D22 (−) terminal.

Is voltage 0.5 V at full close throttle, and approx. 4.5 V at full open throttle?
NOTE: There should be a smooth transition from 0.5 V to approx. 4.5 V as the throttle is depressed.

NO → A/T only:

Turn the ignition switch OFF.

Disconnect the 22P connector from the TCM.

Turn the ignition switch ON.

Is voltage 0.5 V at full close throttle, and 4.5 V at full open throttle?
NOTE: There should be a smooth transition from 0.5 V to 4.5 V as the throttle is depressed.

NO → Replace the TP sensor. Repair open or short in RED/YEL wire between ECM (D11), TCM and TP sensor.

YES → Replace the TCM.

YES → Substitute a known-good ECM and recheck. If symptom/indication goes away, replace the original ECM.

(From page 11-68)

Is there approx. 5 V?

YES → Repair open in GRN/WHT wire between ECM (D22) and TP sensor.

NO

Turn the ignition switch OFF.

Connect the test harness between the ECM and connectors (see page 11-39).

Turn the ignition switch ON.

Measure voltage between D20 (+) terminal and D22 (−) terminal.

Is there approx. 5 V?

YES → Repair open in YEL/WHT wire between ECM (D20) and TP sensor.

NO → Substitute a known-good ECM and recheck. If prescribed voltage is now available, replace the original ECM.

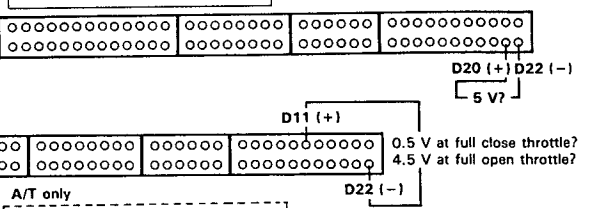

Troubleshooting Flowchart — Intake Air Temperature (IAT) Sensor

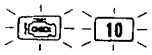

The Malfunction Indicator Lamp (MIL) indicates Diagnostic Trouble Code (DTC) 10: A problem in the Intake Air Temperature (IAT) Sensor circuit.

The IAT Sensor is a temperature dependant resistor (thermistor). The resistance of the thermistor decreases as the intake air temperature increases as shown below.

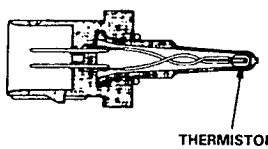

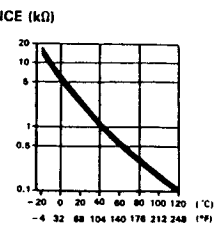

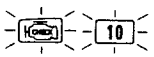

- The MIL has been reported on.
- With service check connector jumped (see page 11-36), code 10 is indicated.

Do the ECM Reset Procedure (see page 11-37).

Turn the ignition switch ON.

Is the MIL on and does it indicate code 10?

- NO → Intermittent failure, system is OK at this time (test drive may be necessary). Check for poor connections or loose wires at C219 (located under the hood on the front right side of the car), C125 (IAT sensor) and ECM.
- YES ↓

Turn the ignition switch OFF.

Disconnect the 2P connector from the IAT sensor.

Measure resistance between the 2 terminals on the IAT sensor.

Is there 0.4 – 4.0 kΩ?

- NO → Replace the IAT sensor.
- YES ↓

(To page 11-71)

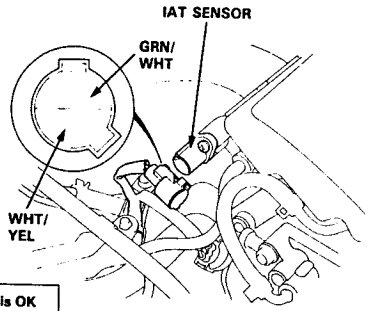

(From page 11-70)

Turn the ignition switch ON.

Measure voltage between WHT/YEL (+) terminal and body ground.

Is there approx. 5 V?

- YES → Measure voltage between WHT/YEL (+) terminal and GRN/WHT (–) terminal.
  - Is there approx. 5 V?
    - NO → Repair open in GRN/WHT wire between ECM (D22) and IAT sensor.
    - YES → Substitute a known-good ECM and recheck. If symptom/indication goes away, replace the original ECM.
- NO ↓

Turn the ignition switch OFF.

Connect the test harness "D" connector to the ECM only, not to the main wire harness (see page 11-39).

Turn the ignition switch ON.

Measure voltage between D15 (+) terminal and D22 (–) terminal.

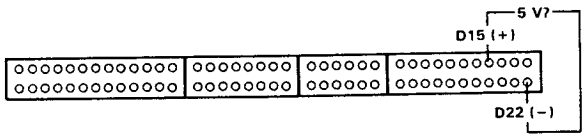

Is there approx. 5 V?

- YES → Repair open or short in WHT/YEL wire between ECM (D15) and IAT sensor.
- NO ↓

Substitute a known-good ECM and recheck. If prescribed voltage is now available, replace the original ECM.

PGM-FI System

Troubleshooting Flowchart — Barometric Pressure (BARO) Sensor

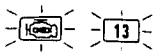

The Malfunction Indicator Lamp (MIL) indicates Diagnostic Trouble Code (DTC) 13: A problem in the Barometric Pressure BARO Sensor.

The BARO Sensor is built into the ECM.

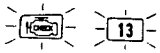

- The MIL has been reported on.
- With service check connector jumped (see page 11-36), code 13 is indicated.

Do the ECM Reset Procedure (see page 11-37).

Turn the ignition switch ON.

Is the MIL on and does it indicate code 13?

NO → **Intermittent failure, system is OK at this time (test drive may be necessary).**

YES → **Substitute a known-good ECM and recheck. If symptom/indication goes away, replace the original ECM.**

Troubleshooting Flowchart — Ignition Output Signal

15

The Malfunction Indicator Lamp (MIL) indicates Diagnostic Trouble Code (DTC) 15: A problem in the Ignition Output Signal circuit.

– The MIL has been reported on.
– With service check connector jumped (see page 11-36), code 15 is indicated.

Do the ECM Reset Procedure (see page 11-37).

Start the engine.

NOTE: If the engine won't start, it may take 20 seconds of cranking to set the code.

Is the MIL on and does it indicate code 15?

NO → **Intermittent failure, system is OK at this time (test drive may be necessary). Check for poor connections or loose wires at C203 (Ignition Control Module (ICM)) and ECM.**

YES

Turn the ignition switch OFF.

Disconnect the 4P connector from the ICM.

Turn the ignition switch ON.

Measure voltage between BLK/YEL (+) terminal and body ground.

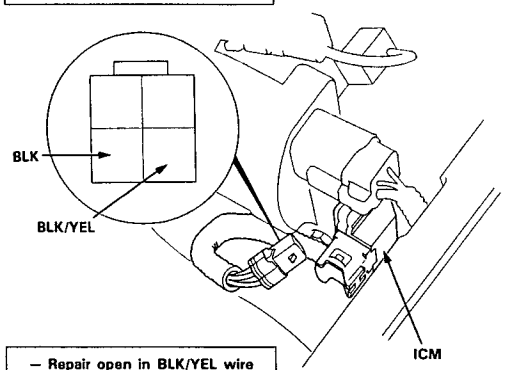

Is there battery voltage?

NO → **– Repair open in BLK/YEL wire between the 4P connector and ignition coil.**
– Repair open in BLK/YEL wire between the ignition coil and ignition switch.

YES

Measure voltage between BLK/YEL (+) terminal and BLK (–) terminal.

Is there battery voltage?

NO → **Repair open in BLK wire between ICM and G101 (located at left side of engine).**

YES

(To page 11-75)

(From page 11-74)

Turn the ignition switch OFF.

Reconnect the 4P connector.

Connect the test harness between the ECM and connectors (see page 11-39).

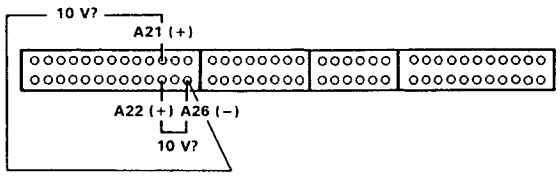

Turn the ignition switch ON.

Measure voltage individually between A21 (+), A22 (+) terminals and A26 (–) terminal.

Is there approx. 10 V?

NO → **– Replace the ICM.**
– Repair open or short in YEL/GRN wire between ICM and ECM (A21 or A22).

NOTE: If the YEL/GRN wire was shorted, the ICM may be damaged.

YES

Substitute a known-good ECM and recheck. If symptom/indication goes away, replace the original ECM.

Troubleshooting Flowchart — Vehicle Speed Sensor (VSS)

17

The Malfunction Indicator Lamp (MIL) indicates Diagnostic Trouble Code (DTC) 17: A problem in the Vehicle Speed Sensor (VSS) circuit.

The VSS generates a pulsing signal when the front wheels turn.

- **The MIL has been reported on.**
- **With service check connector jumped (see page 11-36), code 17 is indicated.**

Do the ECM Reset Procedure (see page 11-37).

Road test necessary with the automatic transmission in 2 position (M/T: 2nd gear) accelerate to 4,000 rpm, then decelerate to 1,500 rpm with throttle fully closed.

Is the MIL on and does it indicate code 17?

NO → **Intermittent failure, system is OK at this time. Check for poor connections or loose wires at C308 (located at left shock tower), C120 (VSS) and ECM.**

YES

Block rear wheels and set the parking brake. Jack up the front of the car and support with safety stands.

WARNING **Block rear wheel before jacking up front of car.**

Turn the ignition switch OFF.

Connect the test harness between the ECM and connectors (see page 11-39).

Turn the ignition switch ON.

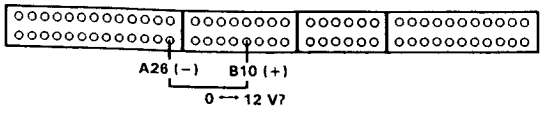

Block the right front wheel and slowly rotate left front wheel and measure voltage between B10 (+) terminal and A26 (−) terminal.

Does voltage pulse 0 V and 12 V?

NO → Turn the ignition switch OFF.

(To page 11-77)

YES

Substitute a known-good ECM and recheck. If symptom/indication goes away, replace the original ECM.

(From page 11-76)

Disconnect the B connector from the ECM only, not the main wire harness.

Turn the ignition switch ON.

Block the right front wheel and slowly rotate left front wheel and measure voltage between B10 (+) terminal and A26 (−) terminal.

Does voltage pulse 0 V and 12 V?

NO →
- **Repair short in ORN wire between ECM (B10) and the VSS, speedometer, TCM integrated control unit or cruise control unit.**
- **Repair open in ORN wire between ECM (B10) and VSS.**
- **If wire is OK, test the VSS.**

YES

Substitute a known-good ECM and recheck. If symptom/indication goes away, replace the original ECM.

Troubleshooting Flowchart — Ignition Timing Adjuster

The Malfunction Indicator Lamp (MIL) indicates Diagnostic Trouble Code (DTC) 18: A problem in the Ignition Timing Adjuster circuit.

The ignition timing adjuster allows the electronic ignition advance to be set to 15° BTDC at idle.

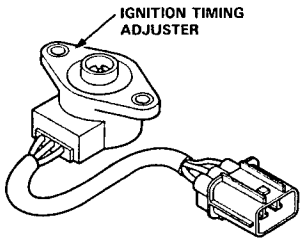

18

- **The MIL has been reported on.**
- **With service check connector jumped (see page 11-36), code 18 is indicated.**

Do the ECM Reset Procedure (see page 11-37).

Turn the ignition switch ON.

Is the MIL on and does it indicate code 18? — NO → **Intermittent failure, system is OK at this time (test drive may be necessary). Check for poor connections or loose wires at C328 (ignition timing adjuster) and ECM.**

YES

Turn the ignition switch OFF.

Disconnect the 3P connector from the control box.

Measure resistance between A terminal and C terminal on ignition timing adjuster.

Is there 3.5–6.5 kΩ? — NO → **Replace the ignition timing adjuster.**

YES

(To page 11-79)

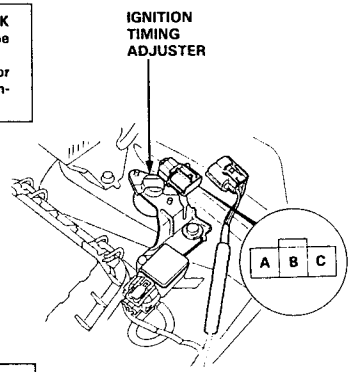

(From page 11-78)

Measure resistance between A and B terminals and between C and B terminals.

Does the sum of the two resistance checks equal 3.5–6.5 kΩ? — YES → **Replace the ignition timing adjuster.**

NO

Turn the ignition switch ON.

Measure voltage between YEL/WHT (+) terminal and GRN/WHT (−) terminal on the main wire harness.

Is there approx. 5 V? — YES → Measure voltage between YEL/WHT (+) terminal and body ground.

Is there approx. 5 V? — YES → **Repair open in GRN/WHT wire between ECM (D22) and ignition timing adjuster.**

NO

Turn the ignition switch OFF.

Connect the test harness between the ECM and connectors (see page 11-39).

Turn the ignition switch ON.

Measure voltage between D20 (+) terminal and D22 (−) terminal.

Is there approx. 5 V? — YES → **Repair open in YEL/WHT wire between ECM (D20) and ignition timing adjuster.**

NO

Substitute a known-good ECM and recheck. If prescribed voltage is now available, replace the original ECM.

NO

Turn the ignition switch OFF.

Reconnect 3P connector.

Connect the test harness between the ECM and connectors (see page 11-39).

Turn the ignition switch ON.

Measure voltage between D8 (+) terminal and D22 (−) terminal.

Is there 0.5–4.5 V? — NO → **Repair open or short in BRN wire between ECM (D8) and ignition timing adjuster.**

YES

Substitute a known-good ECM and recheck. If symptom/indication goes away, replace the original ECM.

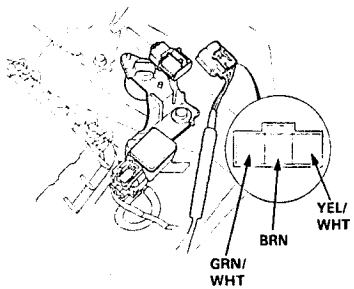

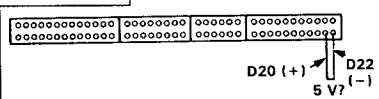

Troubleshooting Flowchart — Electrical Load Detector (ELD)

20 The Malfunction Indicator Lamp (MIL) indicates Diagnostic Trouble Code (DTC) 20: A problem in the Electrical Load Detector (ELD) circuit.

[illegible] check connector [illegible] page 11-36), code 20 is indicated.

[illegible] the ECM Reset Procedure (see page 11-37).

[illegible] engine and keep engine speed at idle. [illegible] headlights.

Does the MIL indicate code 20?
- NO → Intermittent failure, system is OK at this time (test drive may be necessary). Check for poor connections or loose wires at C218 (ELD) and ECM.
- YES ↓

Turn the ignition switch OFF.

Open the under-hood fuse/relay box lid.

Disconnect the 3P connector from the ELD.

Turn the ignition switch ON.

Measure voltage between BLK/YEL (+) terminal and BLK (−) terminal.

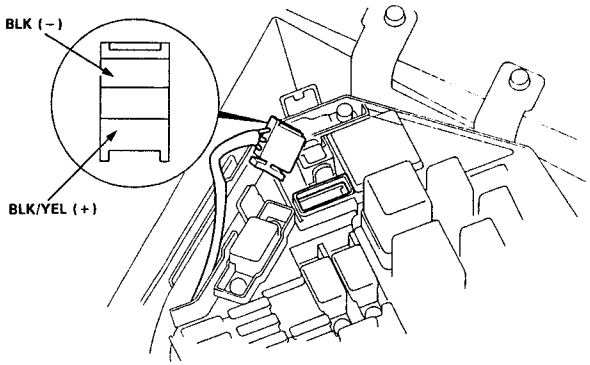

Is there battery voltage?
- NO → Measure voltage between BLK/YEL (+) terminal and body ground.
  - Is there battery voltage?
    - YES → Repair open in BLK wire between the 3P connector and G201 (located at right side of engine compartment).
    - NO → Repair open in BLK/YEL wire between No. 2 ECU (ECM) (15 A) fuse in the under-dash fuse/relay box and the 3P connector.
- YES ↓

(To page 11-81)

(From page 11-80)

Measure voltage between GRN/RED terminal and body ground.

Is there 4.5–5.0 V?
- NO → Repair open or short in GRN/RED wire between ECM (D10) and the 3P connector. If wire is OK, substitute a known-good ECM and recheck.
- YES ↓

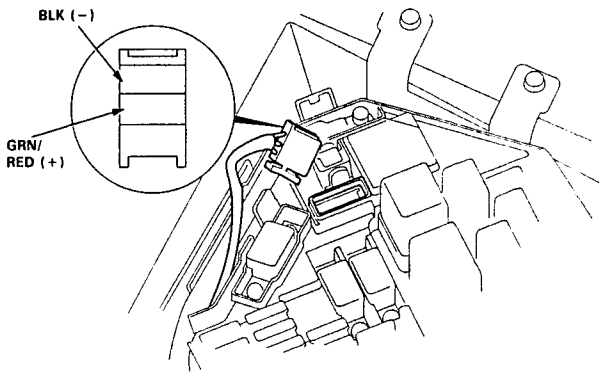

Turn the ignition switch OFF.

Connect the 3P connector to the ELD.

Connect the test harness between the ECM and connectors (see page 11-39).

(To page 11-82)

(cont'd)

Troubleshooting Flowchart — Electrical Load Detector (ELD) (cont'd)

(From page 11-81)

Start the engine and allow it to idle.

Under the conditions listed in the chart to the right, measure voltage between D10 (+) terminal and A26 (−) terminal.

Condition	Voltage
Headlight switch, first position (•)	1.8–2.8 V
Headlight switch, second position (●) (low)	0.8–1.8 V

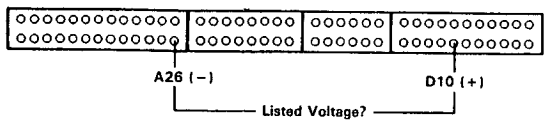

Is the voltage listed in the chart available?

NO → **Replace the ELD.**

YES → **Substitute a known-good ECM and recheck. If symptom/indication goes away, replace the original ECM.**

Troubleshooting Flowchart — Knock Sensor (KS)

23 — The Malfunction Indicator Lamp (MIL) indicates Diagnostic Trouble Code (DTC) 23: A problem in the front Knock Sensor (KS) circuit.

53 — The Malfunction Indicator Lamp (MIL) indicates Diagnostic Trouble Code (DTC) 53: A problem in the rear Knock Sensor (KS) circuit.

23 or 53

- The MIL has been reported on.
- With service check connector jumped (see page 11-36), code 23 and/or 53 are indicated.

Do the ECM Reset Procedure (see page 11-37).

Warm up the engine to normal operating temperature (the radiator fan comes on).

Hold engine at 3,000–4,000 rpm for 10 seconds in neutral. (A/T: Transmission in N or P position).

Is the MIL on and does it indicate code 23 and/or 53?

NO → Intermittent failure, system is OK at this time (test drive may be necessary). Check for poor connections or loose wires at C308 (located at left shock tower), C123, C119 (KS) and ECM.

YES

Turn the ignition switch OFF.

Connect the test harness to the main wire harness only, not to the ECM (see page 11-39).

Disconnect the C308 connector (located at left shock tower).

Check for continuity between C1 or C3* terminal and body ground.

Is there continuity?

YES → Repair short in ORN/WHT or RED/BLU* wire between ECM (C1 or C3*) and the KS.

NO

(To page 11-85)

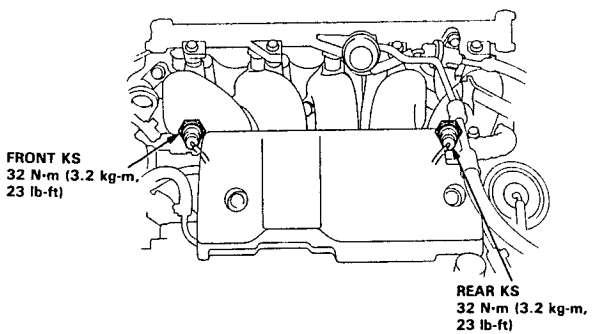

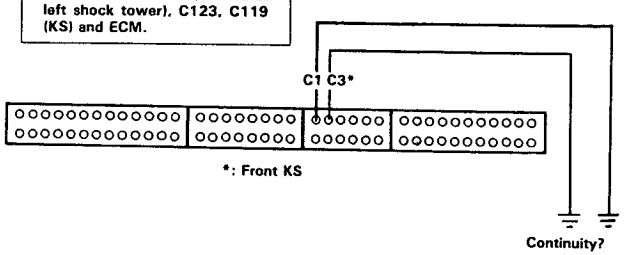

*: Front KS

(From page 11-84)

Check for continuity on ORN/WHT or RED/BLU* wire between C1 or C3* and C308 (14P) connector of main wire harness.

Is there continuity?

NO → Repair open in ORN/WHT or RED/BLU* wire between ECM (C1 or C3*) and the indicated KS.

YES

Substitute a known-good ECM and then hold the engine rpm at 3,000–4,000 rpm for 10 seconds in neutral (A/T: Transmission in N or P position) and recheck.

Is the MIL on and does it indicate code 23 and/or 53?

NO → Replace the original ECM.

YES

Replace the front and/or rear KS and recheck.

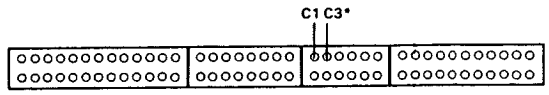

*: Front KS

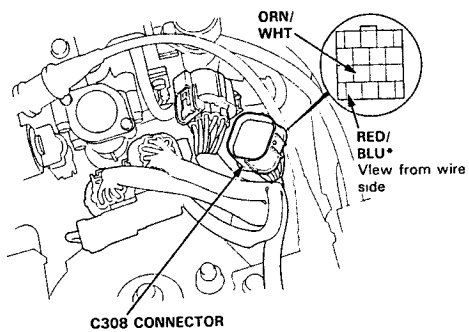

Troubleshooting Flowchart — A/T FI Signal A/B

30 The Malfunction Indicator Lamp (MIL) indicates Diagnostic Trouble Code (DTC) 30: A problem in the A/T FI signal A circuit between Transmission Control Module (TCM) and ECM.

31 The Malfunction Indicator Lamp (MIL) indicates Diagnostic Trouble Code (DTC) 31: A problem in the A/T FI signal B circuit between Transmission Control Module (TCM) and ECM.

30 or 31

With service check connector jumped (see page 11-36), code 30 and/or 31 are indicated.

Do the ECM Reset Procedure (see page 11-37).

Test drive necessary.
Drive the car for several miles so that the transmission upshifts and downshifts several times.

Does the MIL indicate code 30 and/or 31?

NO → **Intermittent failure, system is OK at this time.**
Check for poor connections or loose wires at C441 (TCM) and ECM.

YES

Turn the ignition switch OFF.

Connect the test harness to the main harness only, not to the ECM (see page 11-39).

Disconnect the 22P connector from the TCM.

Check for continuity between B3 or B4* terminal and body ground.

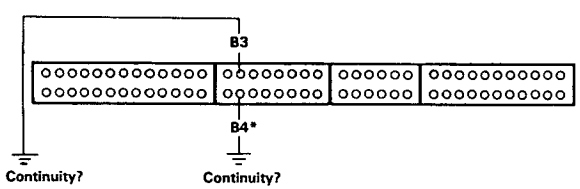

*: code 31 (A/T FI Signal B)

Is there continuity?

YES → **Repair short in WHT/GRN or WHT/RED* wire between ECM (B3 or B4*) and the TCM.**

NO

(To page 11-87)

(From page 11-86)

Check for continuity on WHT/GRN or WHT/RED* wire between B3 or B4* and 22P connector of the TCM.

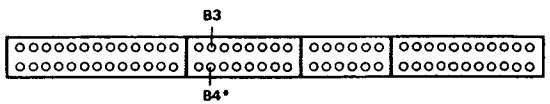

Does continuity exist?

NO → **Repair open in WHT/GRN or WHT/RED* wire between ECM (B3 or B4*) and the TCM.**

*: code 31 (A/T FI Signal B)

YES

Substitute a known-good ECM and recheck. If symptom/indication goes away, replace the original ECM.

Idle Control System

System Troubleshooting Guide

NOTE:

- Across each row in the chart, the sub-systems that could be sources of a symptom are ranked in the order they should be inspected, starting with ①. Find the symptom in the left column, read across to the most likely source, then refer to the page listed at the top of that column. If inspection shows the system is OK, try the next system ②, etc.
- If the idle speed is out of specification and the Malfunction Indicator Lamp (MIL) dose not blink Diagnostic Trouble Code (DTC) 14, go to inspection described on page 11-91.

PAGE / SUB-SYSTEM / SYMPTOM		IDLE ADJUSTING SCREW	IDLE AIR CONTROL VALVE	AIR CONDI-TIONING SIGNAL	ALTER-NATOR FR SIGNAL	AUTOMATIC TRANSAXLE GEAR POSITION SIGNAL	STARTER SWITCH SIGNAL	BRAKE SWITCH SIGNAL	POWER STEERING PRESSURE SWITCH	FAST IDLE THERMO VALVE	HOSES AND CONNEC-TIONS
		108	92	94	96	98	100	102	104	105	•
DIFFICULT TO START ENGINE WHEN COLD										①	
WHEN COLD FAST IDLE OUT OF SPEC (1,000–2,000 rpm)		③	②							①	
ROUGH IDLE			②								①
WHEN WARM RPM TOO HIGH		③	①						③	②	③
WHEN WARM RPM TOO LOW	Idle speed is below specified rpm (no load)	②	①								
	Idle speed does not increase after initial start up.		①								
	On models with automatic transmission, the idle speed drops in gear		②			①					
	Idle speeds drops when air conditioner in ON		②	①							
	Idle speed drops when steering wheel is turning		②						①		
	Idle speed fluctuates with electrical load		②		③						①
FREQUENT STALLING	WHILE WARMING UP	②	①								
	AFTER WARMING UP	①	②								
FAILS EMISSION TEST											①

System Description

The idle speed of the engine is controlled by the Idle Air Control (IAC) Valve.
The valve changes the amount of air bypassing into the intake manifold in response to electric current controlled by the ECM.
When the IAC Valve is activated, the valve opens to maintain the proper idle speed.

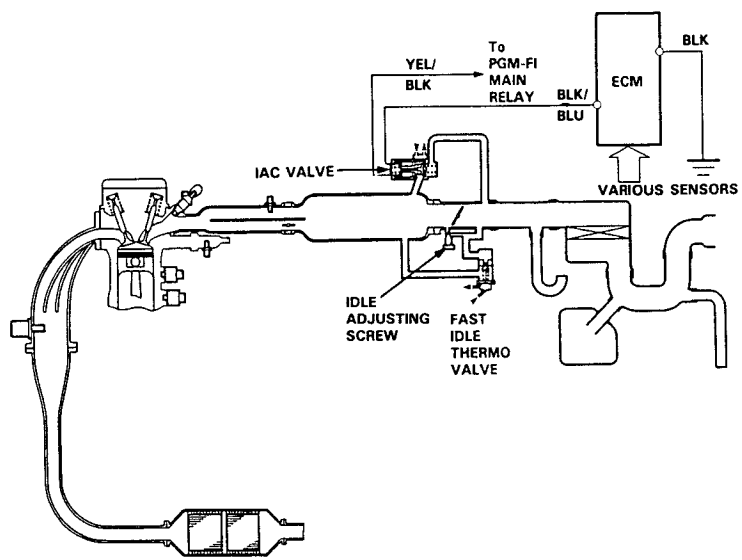

(cont'd)

Idle Control System

System Description (cont'd)

1. After the engine starts, the IAC valve opens for a certain time. The amount of air is increased to raise the idle speed about 150–300 rpm.

2. When the engine coolant temperature is low, the IAC valve is opened to obtain the proper fast idle speed. The amount of bypassed air is thus controlled in relation to the engine coolant temperature.

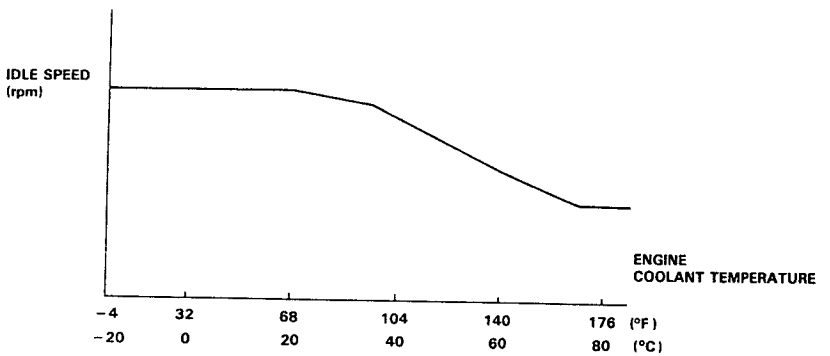

1. When the idle speed is out of specification and the Malfunction Indicator Lamp (MIL) does not blink Diagnostic Trouble Code (DTC) 14, check the following items:
   - Adjust the idle speed (page 11-106)
   - Air conditioning signal (page 11-94)
   - ALT FR signal (page 11-96)
   - A/T gear position signal (page 11-98)
   - Starter switch signal (page 11-100)
   - Brake switch signal (page 11-102)
   - PSP switch signal (page 11-104)
   - Fast idle thremo valve (page 11-105)
   - Hoses and connections
   - IAC valve and its mounting O-rings

2. If the above items are normal, substitute a known-good IAC valve and readjust the idle speed (page 11-106).

   - If the idle speed still connot be adjusted to specification (and the MIL does not blink code 14) after IAC valve replacement, substitute a known-good ECM and recheck. If symptom goes away, replace the original ECM.

Idle Control System

Troubleshooting Flowchart — Idle Air Control (IAC) Valve

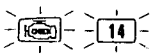

The Malfunction Indicator Lamp (MIL) indicates Diagnostic Trouble Code (DTC) 14: A problem in the Idle Air Control (IAC) Valve circuit.

The IAC Valve changes the amount of air bypassing the throttle body in response to a current signal from the ECM in order to maintain the proper idle speed.

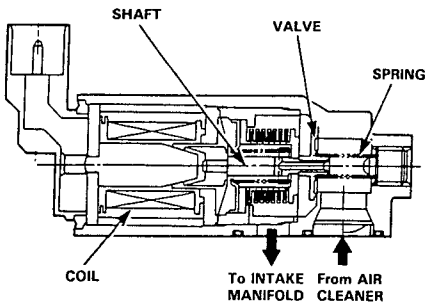

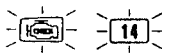

- The MIL has been reported on.
- With service check connector jumped (see page 11-36), code 14 is indicated.

Do the ECM Reset Procedure (see page 11-37).

Start the engine.

Is the MIL on and does it indicate code 14?

NO → With the engine running and the accelerator pedal released disconnect the 2P connector on the IAC valve.

Is there a reduction in engine rpm?

YES → Intermittent failure, system is OK at this time (test driving may be necessary). Check for poor connections or loose wires at C307 (located at left shock tower), C122 (IAC valve) and ECM.

NO → Substitute a known-good IAC valve and retest. If symptom goes away, replace the orignal IAC valve.

YES → Disconnect the 2P connector from the IAC valve.

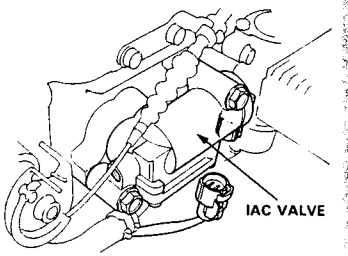

(To page 11-93)

(From page 11-92)

Measure voltage between the YEL/BLK wire and body ground.

Is there battery voltage?

NO → Repair open in YEL/BLK wire between the IAC valve and PGM-FI main relay.

YES → Turn the ignition switch off and reconnect the 2P connector to the IAC valve.

Connect the test harness "A" connector to the main wire harness only, not the ECM (see page 11-39).

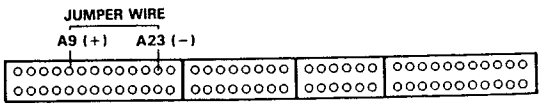

Turn the ignition switch ON.

Momentarily connect A9 (+) terminal to A23 (−) terminal several times.

Does the IAC valve click?

YES → Substitute a known-good ECM and retest. If symptom/indication goes away, replace the original ECM.

NO → Check for an open or short in BLK/BLU wire between IAC valve and ECM (A9). If the wire is OK, replace the IAC valve.

Idle Control System

Troubleshooting Flowchart — Air Conditioning Signal

This signals the ECM when there is a demand for cooling from the air conditioning system.

Inspection of Air Conditioning Signal.

Connect the test harness between the ECM and connectors. Disconnect "B" connector from the main wire harness only, not ECM (see page 11-39)

Turn the ignition switch ON.

Measure voltage between B5 (+) terminal and A26 (−) terminal.

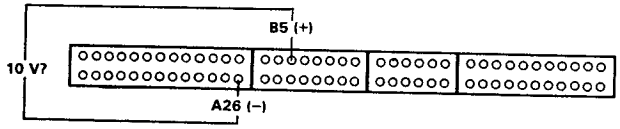

Is there approx. 10 V?

- NO → **Substitute a known-good ECM and recheck. If prescribed voltage is now available, replace the original ECM.**
- YES ↓

Reconnect "B" connector to the main wire harness.

Momentarily connect A15 terminal to A26 terminal several times.

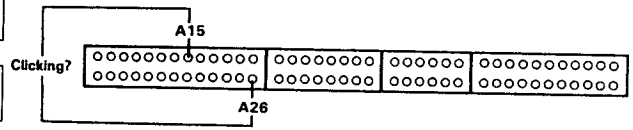

Is there a clicking noise from the A/C compressor clutch?

- NO → Connect the RED/BLU terminal of the 4P connector on the A/C clutch relay to body ground.

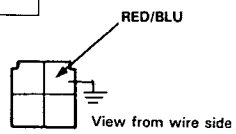

Is there a clicking noise from the A/C compressor clutch?

- NO → **See air conditioner inspection (see section 22).**
- YES → **Repair open in RED/BLU wire between ECM (A 15) and A/C clutch relay.**

- YES ↓

Start the engine.

Blower switch ON.

(To page 11-95)

(From page 11-94)

A/C switch ON.

Does A/C operate ?

- NO → Measure voltage between B5 (+) terminal and A26 (−) terminal.

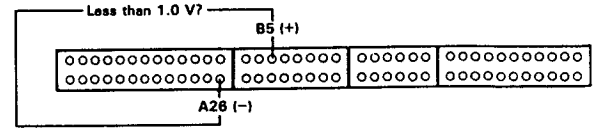

Is voltage less than 1.0 V?

- NO → **Repair open in BLU/BLK wire between ECM (B5) and A/C pressure switch.**
- YES → **Substitute a known-good ECM and recheck. If prescribed voltage is now abailable, replace the original ECM.**

- YES ↓

Air conditioning signal is OK.

Idle Control System

Troubleshooting Flowchart — Alternator (ALT) FR Signal

This signals the ECM when the Alternator (ALT) is charging.

Inspection of ALT FR signal.

Connect the test harness between the ECM and connectors. Disconnect "D" connector from the main wire harness only, not the ECM (see page 11-39).

Turn the ignition switch ON

Measure voltage between D9 (+) terminal and A26 (−) terminal.

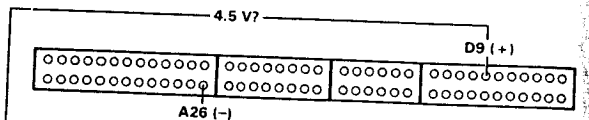

Is there approx. 4.5 V?

NO → **Substitute a known-good ECM and recheck. If prescribed voltage is now available, replace the original ECM.**

YES

Turn the ignition switch OFF.

Reconnect "D" connector to the main wire harness.

Warm up engine to normal operating temperature (the radiator fan comes on).

Measure voltage between D9 (+) terminal and A26 (−) terminal.

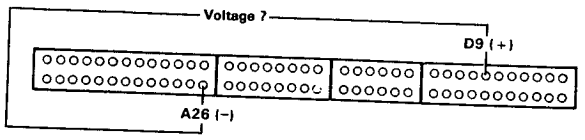

Does the voltage decrease when headlights and rear defogger are turned on ?

NO → Turn the ignition switch OFF.

YES

Do the ECM Reset Procedure (see page 11-37).

ALT FR signal is OK.

(To page 11-97)

(From page 11-96)

Disconnect "D" connector from ECM only, not the main wire harness.

NOTE: The radio has a coded theft protection circuit. Be sure you get the customer's code number before disconnecting the battery cable.

Disconnect the negative battery cable from the battery.

Check for continuity between D9 terminal and body ground.

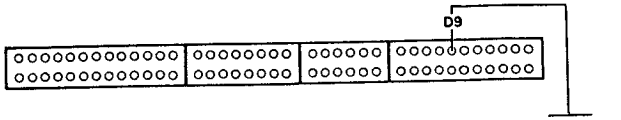

Is there continuity?

YES → Disconnect GRN connector from the ALT.

NO → Disconnect GRN connector from the ALT.

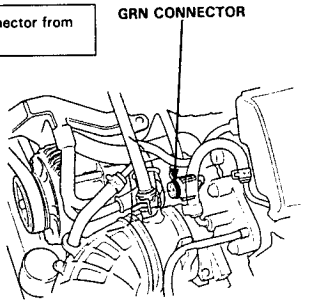

Connect WHT/RED wire to body ground.

Check for continuity between D9 terminal and body ground.

Is there continuity?

YES → **Repair open in WHT/RED wire between ECM (D9) and ALT.**

NO → **See ALT inspection (see section 23)**

Check for continuity between D9 terminal and body ground.

Is there continuity?

NO → **See ALT inspection (see section 23).**

YES → **Repair short in WHT/RED wire between ECM (D9) and ALT.**

Idle Control System

Troubleshooting Flowchart — Automatic Transaxle (A/T) Gear Position Signal

This signals the ECM when the transmission is in [N] or [P] position.

Inspection of A/T Gear Position Signal.

Turn the ignition switch ON.

Observe the A/T gear position indicator and select each position separately.

Does the indicator light properly?

- NO → **See A/T gear position indicator inspection (see section 14).**
- YES ↓

Turn the ignition switch OFF.

Connect the test harness between the ECM and connectors. Disconnect "B" connector from the main wire harness only, not the ECM (see page 11-39)

Turn the ignition switch ON.

Measure voltage between B7 (+) terminal and A26 (−) terminal.

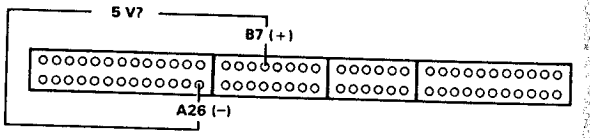

Is there approx. 5 V?

- NO → **Substitute a known-good ECM and recheck. If prescribed voltage is now available, replace the original ECM.**
- YES ↓

Turn the ignition switch OFF.

Reconnect "B" connector to the main wire harness.

Start the engine.

(To page 11-99)

(From page 11-98)

Measure voltage between B7 (+) terminal and A26 (−) terminal with the transmission in [N] and [P] position individualy.

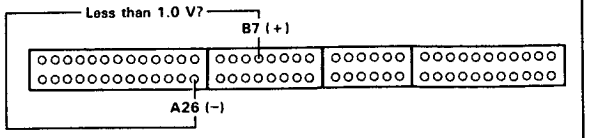

Is there less than 1.0 V?

- NO → **Repair open in YEL/GRN wire between ECM (B7) and gauge assembly.**
- YES ↓

Measure voltage between B7 (+) terminal and A26 (−) terminal with the transmission in gear.

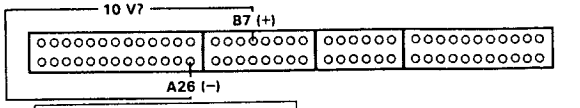

Is there approx. 10 V?

- NO → **Repair short in YEL/GRN wire between ECM (B7) and gauge assembly.**
- YES ↓

A/T gear position signal is OK.

Idle Control System

Troubleshooting Flowchart — Starter Switch Signal

This signals the ECM when the engine is cranking.

Inspection of Starter Switch Signal.

Connect the test harness between the ECM and connectors (see page 11-39).

Measure voltage between B9 (+) terminal and A26 (−) terminal when the ignition switch in the start position.

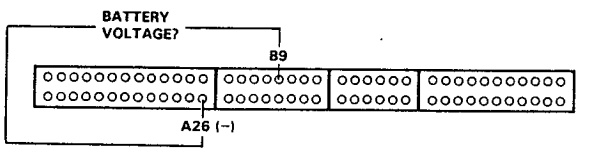

NOTE:
- M/T: Clutch pedal must be depressed.
- A/T: Transmission in [N] or [P] position.

Is there battery voltage ?

NO → Inspect No. 9 STARTER SIGNAL (7.5 A) fues in the under-dash fuse/relay box.

Is the fuse OK?

NO → **Replace the fuse.**

YES → **Repair open in BLU/RED wire between ECM (B9) and No. 9 STARTER SIGNAL (7.5 A) FUSE.**

YES → **Starter switch signal is OK.**

Idle Control System

Troubleshooting Flowchart — Brake Switch Signal

This signals the ECM when the brake pedal is depressed.

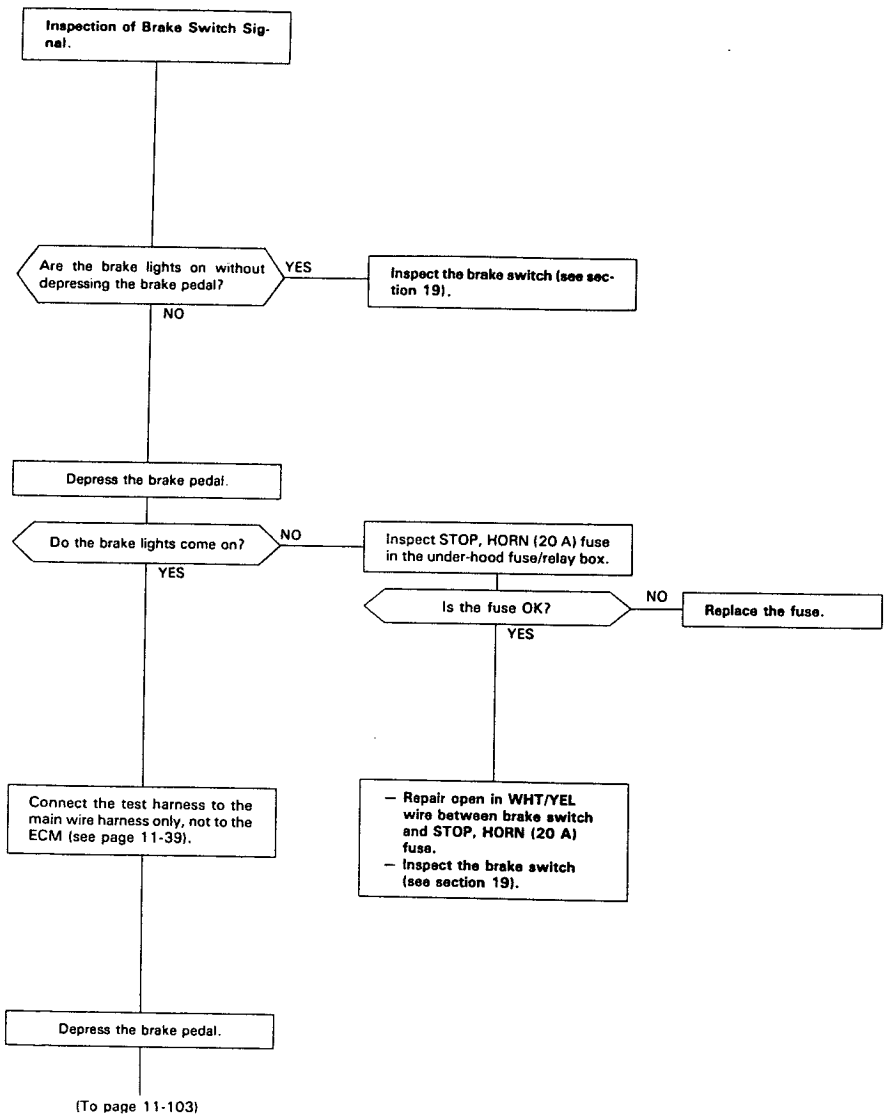

(To page 11-103)

(From page 11-102)

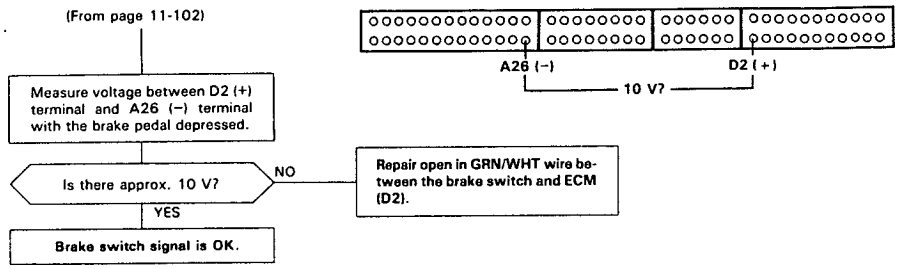

Idle Control System

Troubleshooting Flowchart — Power Steering Pressure (PSP) switch Signal

This signals the ECM when the power steering load is high.

Inspection of PSP switch Signal

Connect the test harness between the ECM and connectors (see page 11-39).

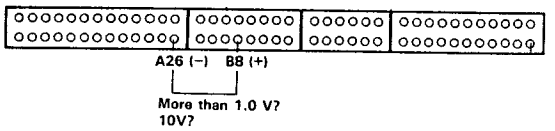

Turn the ignition switch ON.

Measure voltage between B8 (+) terminal and A26 (−) terminal.

Is there more than 1.0 V?

- YES → Disconnect the 2P connector from the PSP switch. → Connect RED terminal to BLK terminal. → Is there more than 1.0 V?
  - NO → Replace the PSP switch.
  - YES → Repair open in RED wire between ECM (B8) and PSP switch or BLK wire between PSP switch and G302 (located at left side of engine compartment).
- NO → Start the engine.

Turn steering wheen slowly.

Measure voltage between B8 (+) terminal and A26 (−) terminal while steering wheel is turning.

Is there approx. 10 V?

- NO → Turn the ignition switch OFF. → Disconnect "B" connector from main wire harness only, not the ECM. → Thurn the ignition switch ON. → Is there approx. 10 V?
  - NO → Substitute a known-good ECM and recheck. If precribed voltage is now available, replace the original ECM.
  - YES → Turn the ignition switch OFF. → Reconnect "B" connector to main wire harness and disconnect 2P connector on the PSP switch. → Turn the ignition switch ON. → Is there approx. 10 V?
    - YES → Replace the PSP switch.
    - NO → Repair short in RED wire between ECM (B8) and PSP switch.
- YES → PSP switch signal is OK.

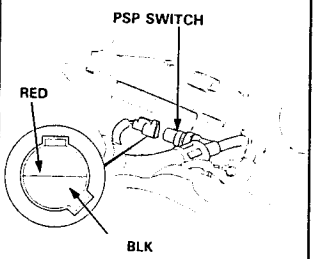

Fast Idle Thermo Valve

Description

To prevent erratic running when the engine is warming up, it is necessary to raise the idle speed. The fast idle thermo valve is controlled by a thermowax plunger. When the engine is cold, the engine coolant surrounding the thermowax contracts the plunger, allowing additional air to be bypassed into the intake manifold so that the engine idles faster. When the engine reaches operating temperature, the valve closes, reducing the amount of air by passing into the manifold.

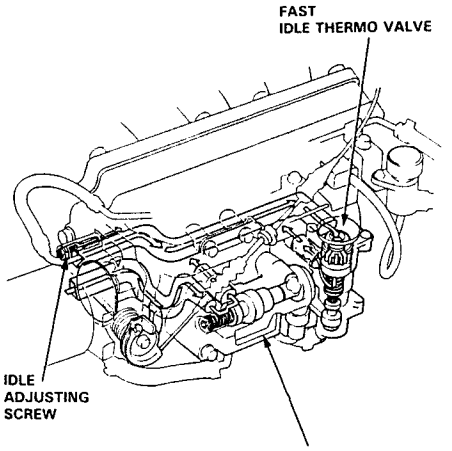

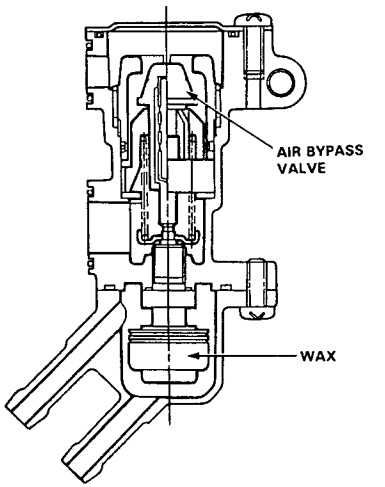

Inspection

NOTE: The fast idle thermo valve is factory adjusted; it should not be disassembled.

1. Remove the cove of the fast idle thermo valve.
2. Start the engine.
3. Put your finger on the valve seat area and make sure that there is air flow with the engine cold (engine coolant temperature below 86°F, 30°C) and idling.

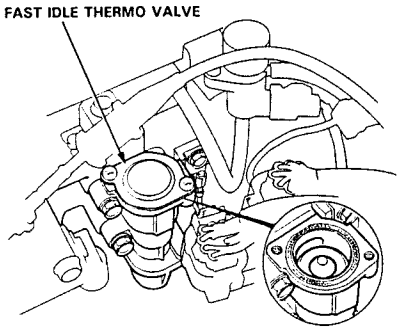

- If not, replace the fast idle thermo valve and retest.

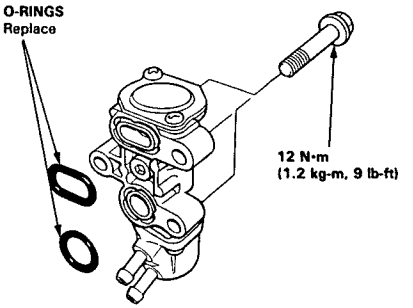

4. Warm up the engine (the radiator fan comes on).
5. Check that the valve is completely closed. If not, air suction can be felt in the valve seat area.
   - If any suction is felt, the valve is leaking. Check engine coolant level and for air in the engine cooling system (see section 10). If OK, replace the fast idle thermo valve and recheck.

Idle Speed Setting

Inspection/Adjustment

NOTE: (Canada) Pull the parking brake lever up. Start the engine, then check that the headlights are off.

1. Start the engine and warm it up to normal operating temperature (the radiator fan comes on).
2. Connect a tachometer.
3. Disconnect the 2P connector from the Idle Air Control (IAC) valve.

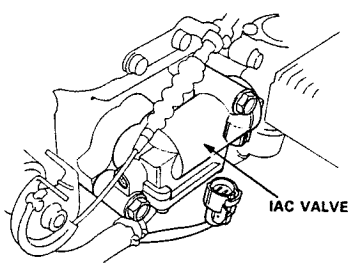

4. Start the engine with the accelerator pedal slightly depressed. Stabilize the rpm at 1000, then slowly release the pedal until the engine idles.
5. Check idling in no-load conditions: headlights, blower fan, rear defogger, cooling fan, and air conditioner are not operating.

Idle speed should be:

M/T	550 ± 50 rpm
A/T	550 ± 50 rpm (in N or P position)

Adjust the idle speed, if necessary, by turning the idle adjusting screw.

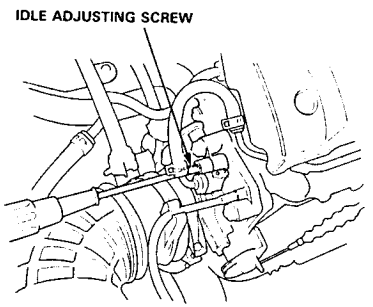

6. Turn the ignition switch OFF.
7. Reconnect the 2P connector on the IAC valve, then remove BACK UP (10 A) fuse in the under-hood fuse/relay box for 10 seconds to reset the ECM.
8. Restart and idle the engine with no-load conditions for one minute, then check the idle speed.

   NOTE: (Canada) Pull the parking brake lever up. Start the engine, then check that the headlights are off.

   Idle speed should be:

M/T	700 ± 50 rpm
A/T	700 ± 50 rpm (in N or P position)

9. Idle the engine for one minute with headlights (Hi) and rear defogger ON and check the idle speed.

   Idle speed should be:

M/T	770 ± 50 rpm
A/T	770 ± 50 rpm (in N or P position)

10. Turn the headlights and rear defogger off. Idle the engine for one minute with blower fan switch at HI and air conditioner on, then check the idle speed.

    Idle speed should be:

M/T	770 ± 50 rpm
A/T	770 ± 50 rpm (in N or P position)

NOTE: If the idle speed is not within specification, see System Troubleshooting Guide on page 11-88.

Fuel Supply System

System Troubleshooting Guide

NOTE: Across each row in the chart, the sub-systems that could be sources of a symptom are ranked in the order they should be inspected starting with ①. Find the symptom in the left column, read across to the most likely source, then refer to the page listed at the top of that column. If inspection shows the system is OK, try the next most likely system ②, etc.

PAGE / SUB-SYSTEM / SYMPTOM		FUEL INJECTOR	FUEL PRESSURE REGULATOR	FUEL FILTER	FUEL PUMP	PGM-FI MAIN RELAY	CONTAMI-NATED FUEL
		110	116	117	118	120	•
ENGINE WON'T START				③	①	②	
DIFFICULT TO START ENGINE WHEN COLD OR HOT				①			
ROUGH IDLE		①					②
POOR PERFORMANCE	MISFIRE OR ROUGH RUNNING	①	③				②
	FAILS EMISSION TEST	②	①				
	LOSS OF POWER	③		②	①		
FREQUENT STALLING	WHILE WARMING UP		①				
	AFTER WARMING UP		①				

Fuel Supply System

System Description

The fuel supply system consists of a fuel tank, in-tank high pressure fuel pump, PGM-FI main relay, fuel filter, fuel pressure regulator, fuel injectors, injector resistor, and fuel hoses and pipes.
This system delivers pressure-regulated fuel to the fuel injectors and cuts the fuel delivery when the engine is not running.

Fuel Pressure

Relieving

⚠ WARNING

- **Do not smoke while working on the fuel system. Keep open flames or sparks away from your work area.**
- **Be sure to relieve fuel pressure while the engine is off.**

NOTE: Before disconnecting fuel pipes or hoses, release pressure from the system by loosening the 6 mm service bolt on top of the fuel filter.

1. Disconnect the battery negative cable from the battery negative terminal.

   NOTE: The radio has a coded theft protection circuit. Be sure you get the customer's code number before disconnecting the battery cable.

2. Remove fuel fill cap.
3. Use a box end wrench on the 6 mm service bolt at the fuel filter, while holding the special banjo bolt with another wrench.
4. Place a rag or shop towel over the 6 mm service bolt.
5. Slowly loosen the 6 mm service bolt one complete turn.

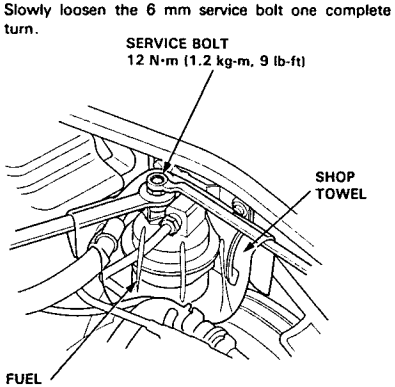

NOTE:
- A fuel pressure gauge can be attached at the 6 mm service bolt hole.
- Always replace the washer between the service bolt and the special banjo bolt, whenever the service bolt is loosened.
- Replace all washers whenever the bolts are removed.

Inspection

1. Relieve fuel pressure (see page 11-108).
2. Remove the service bolt on the fuel filter while holding the banjo bolt with another wrench. Attach the fuel pressure gauge.
3. Start the engine. *Measure the fuel pressure with the engine idling and vacuum hose of the fuel pressure regulator disconnected from the intake manifold and pinched.

   Pressure should be:
   300–350 kPa (3.0–3.5 kg/cm², 43–50 psi)

4. Reconnect #7 vacuum hose to the intake manifold.

   Pressure should be:
   235–285 kPa (2.35–2.85 kg/cm², 33–41 psi)

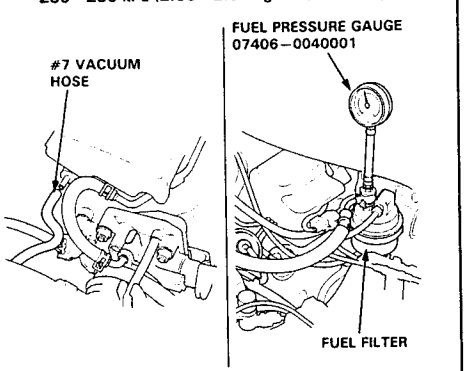

*: If the engine will not start turn the ignition switch on, wait for two seconds, turn it off then back on again and read the fuel pressure.

- If the fuel pressure is not as specified, first check the fuel pump (see page 11-119). If the fuel pump is OK, check the following:

– If the fuel pressure is higher than specified, inspect for:
  - Pinched or clogged fuel return hose or piping.
  - Faulty fuel pressure regulator (page 11-116).

– If the pressure is lower than specified, inspect for:
  - Clogged fuel filter.
  - Faulty fuel pressure regulator (page 11-116).
  - Leakage in the fuel hoses or pipes.

Fuel Supply System

Fuel Injectors

16 The Malfunction Indicator Lamp (MIL) indicates Diagnostic Trouble Code (DTC) 16: A problem in the Fuel Injector circuit.

The Fuel Injectors are a solenoid-actuated constant-stroke pintle type consisting of a solenoid, plunger needle valve and housing. When current is applied to the solenoid coil, the valve lifts up and pressurized fuel is injected. Because the needle valve lift and the fuel pressure are constant, the injection quantity is determined by the length of time that the valve is open (i.e., the duration the current is supplied to the solenoid coil). The Fuel Injector is sealed by an O-ring and seal ring at the top and bottom. These seals also reduce operating noise.

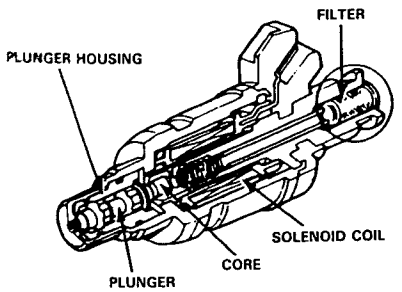

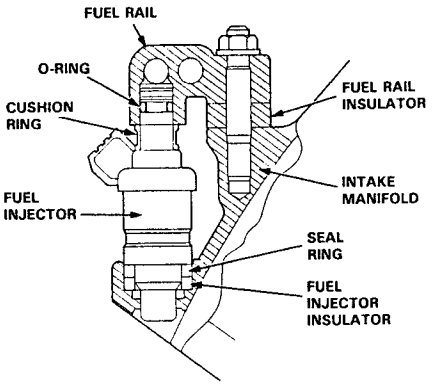

16

- The MIL has been reported on.
- With service check connector jumped (see page 11-36), code 16 is indicated.

Do the ECM Reset Procedure (see page 11-37).

Start the engine and allow it to idle.

NOTE: If engine will not start, it may take 10 seconds of cranking to set the code.

Is the MIL on and does it indicate code 16?

NO → **Intermittent failure, system is OK at this time (test drive may be necessary). Check for poor connections or loose wires at C307 (located at left shock tower), C420 (PGM-FI main relay), C111, C112, C113, C114, C115 (fuel injectors), C104 (injector resistor) and ECM.**

YES

(To page 11-111)

(From page 11-110)

Start engine and listen at each fuel injector for a clicking sound.

Turn the ignition switch OFF.

Disconnect the 2P connector from the fuel injector that does not click.

Measure resistance between the 2 terminals of fuel injector.

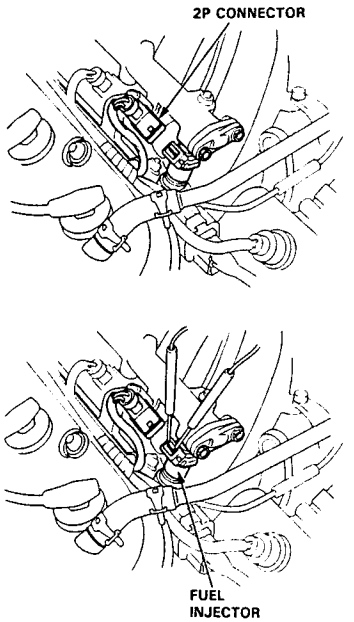

Is there 1.5–2.5 Ω?

NO → **Replace the fuel injector/injectors that are not 1.5–2.5 Ω.**

YES

Turn the ignition switch ON.

Measure voltage between RED/BLK (+) terminal in the 2P connector and body ground.

Is there battery voltage?

NO → Turn the ignition switch OFF.

Disconnect 6P connector on the injector resistor.

Turn the ignition switch ON.

Measure voltage between YEL/BLK (+) terminal and body ground.

(To page 11-112)

YES

(To page 11-112)

(cont'd)

Fuel Injectors (cont'd)

(From page 11-111)

Turn the ignition switch OFF.

Reconnect the 2P connector to the fuel injector.

Connect the test harness between the ECM and connector (see page 11-39).

Turn the ignition switch ON.

Measure voltage between A23 (−) terminal and following terminal:
- No. 1 fuel injector: A1 (+) terminal.
- No. 2 fuel injector: A3 (+) terminal.
- No. 3 fuel injector: A5 (+) terminal.
- No. 4 fuel injector: A2 (+) terminal.
- No. 5 fuel injector: A4 (+) terminal.

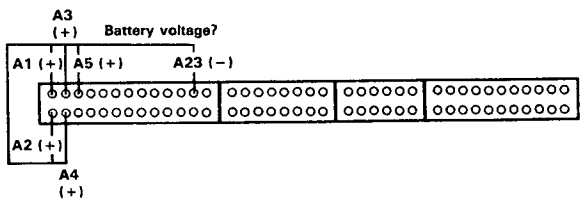

Is there battery voltage?

NO → **Repair open in the wire between the ECM (A1, A3, A5, A2 or A4) and the fuel injectors.**

YES → **Substitute a known-good ECM and recheck. If symptom /indication goes away, replace the original ECM.**

(From page 11-111)

Is there battery voltage?

NO → **Repair open in the YEL/BLK wire between the injector resistor and the PGM-FI main relay.**

YES → Test the injector resistor (see page 11-115).

Does the injector resistor test OK?

NO → **Replace the injector resistor.**

YES → **Repair open RED/BLK wire between 2P fuel injector connector and injector resistor.**

Replacement

WARNING **Do not smoke when working on the fuel system. Keep open flames away from your work area.**

1. Relieve fuel pressure (see page 11-108).
2. Remove the engine harness cover.
3. Disconnect the connectors from the fuel injectors.
4. Disconnect the #7 vacuum hose and fuel return hose from the fuel pressure regulator.

   NOTE: Place a rag or shop towel over the hoses before disconnecting them.
5. Disconnect the fuel hose from the fuel rail.
6. Loosen the retainer nuts on the fuel rail and harness holder.
7. Disconnect the fuel rail.
8. Remove the fuel injectors from the intake manifold.

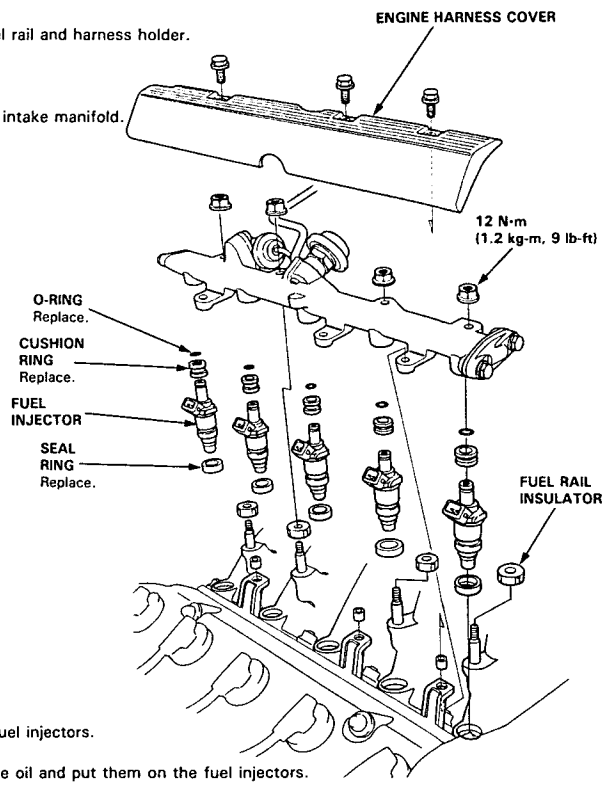

9. Slide new cushion rings onto the fuel injectors.
10. Coat new O-rings with clean engine oil and put them on the fuel injectors.
11. Insert the fuel injectors into the fuel rail first.
12. Coat new seal rings with clean engine oil and press them into the intake manifold.

(cont'd)

Fuel Injectors (cont'd)

13. Install the fuel injectors and fuel rail assembly in the manifold.

CAUTION: To prevent damage to the O-rings, install the fuel injectors in the fuel rail first, then install them in the intake manifold.

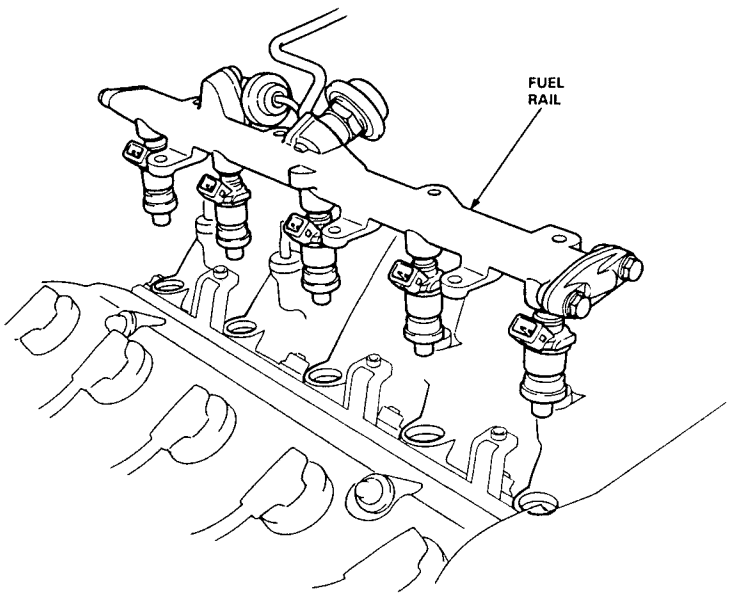

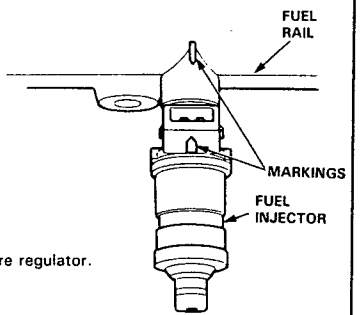

14. Align the center line on the connector with the mark on the fuel rail.
15. Install and tighten the retainer nuts.
16. Connect the fuel hose to the fuel rail with new washers.
17. Connect the #7 vacuum hose and fuel return hose to the fuel pressure regulator.
18. Install the connectors on the fuel injectors.
19. Install the engine harness cover.
20. Turn the ignition switch ON, but do not operate the starter. After the fuel pump runs for approximately two seconds, the fuel pressure in the fuel line rises. Repeat this two or three times, then check whether there is any fuel leakage.

Injector Resistor

Description

The resistor lowers the current supplied to the fuel injectors to prevent damage to the fuel injector coils. This allows a faster response time of the fuel injectors.

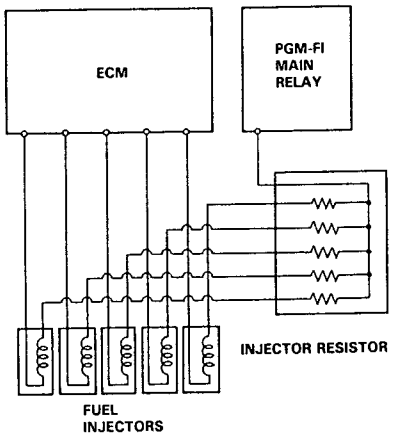

Testing

1. Disconnect the injector resistor connector.
2. Check for resistance between each of the injector resistor terminals (B, C, D, E and F) and the power terminal (A).

Resistance should be: 5—7 Ω

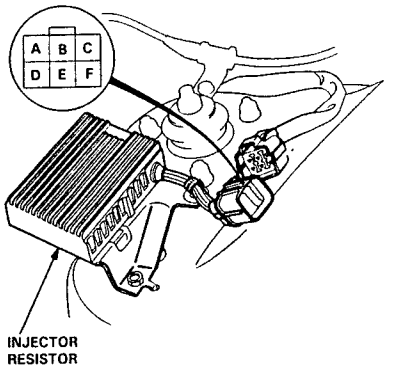

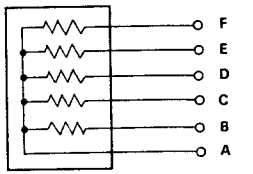

- Replace the injector resistor with a new one if any of the resistance are outside of the specification.

Fuel Supply System

Fuel Pressure Regulator

Description

The fuel pressure regulator maintains a constant fuel pressure to the fuel injectors. When the difference between the fuel pressure and manifold pressure exceeds (255 kPa, 2.55 kg/cm², 36 psi), the diaphragm is pushed upward, and the excess fuel is fed back into the fuel tank through the return line.

CLOSED:

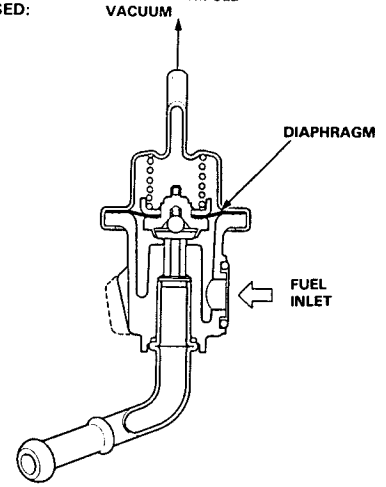

OPEN:

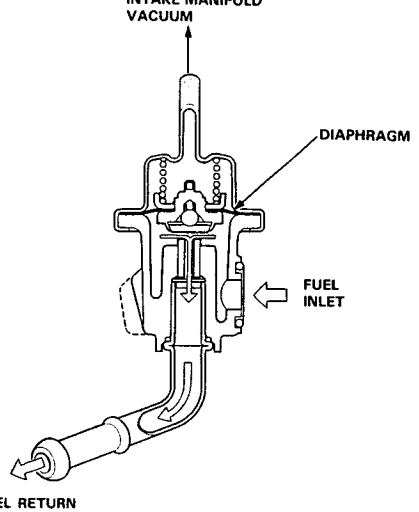

Testing

⚠WARNING Do not smoke during the test. Keep open flames away from your work area.

1. Attach a fuel pressure gauge to the service port of the fuel filter (see page 11-109).

   Pressure should be:
   300–350 kPa (3.0–3.5 kg/cm², 43–50 psi)
   (with the fuel pressure regulator vacuum hose disconnected and pinched)

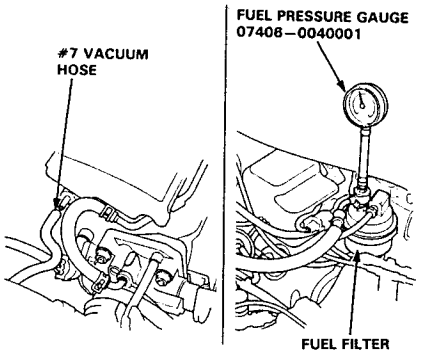

2. Reconnect the #7 vacuum hose to the intake manifold.

3. Check that the fuel pressure rises when the vacuum hose from the fuel pressure regulator is disconnected again.

   If the fuel pressure still did not rise, replace the fuel pressure regulator.

Replacement

⚠WARNING Do not smoke while working on fuel system. Keep open flame away from your work area.

1. Place a shop towel under the fuel pressure regulator, then relieve fuel pressure (see page 11-108).

2. Disconnect the vacuum hose and fuel return hose

3. Remove the two 6 mm retainer bolts.

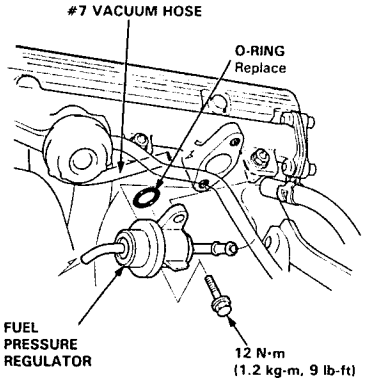

NOTE:
- Replace the O-ring.
- When assembling the fuel pressure regulator, apply clean engine oil to the O-ring and assemble it into its proper position, taking care not to damage the O-ring.

Fuel Filter

Replacement

⚠WARNING
- **Do not smoke while working on fuel system. Keep open flame away from your work area.**
- **While replacing the fuel filter, be careful to keep a safe distance between battery terminals and any tools.**

The fuel filter should be replaced every 4 years or 60,000 miles (96,000 km), whichever comes first or whenever the fuel pressure drops below the specified value (300–350 kPa, 3.0–3.5 kg/cm², 43–50 psi with the fuel pressure regulator vacuum hose disconnected and pinched) after making sure that the fuel pump and the fuel pressure regulator are OK.

1. Place a shop towel under and around the fuel filter.

2. Relieve fuel pressure (see page 11-108).

3. Remove the 12 mm banjo bolt and the fuel feed pipe from the fuel filter.

4. Remove the fuel filter clamp and fuel filter.

5. When assembling, use new washers, as shown.

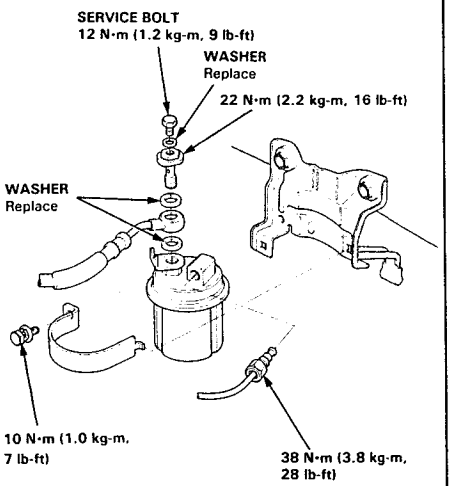

NOTE: Clean the flared joint of high pressure hoses thoroughly before reconnecting them.

Fuel Supply System

Fuel Pump

Description
Because of its compact impeller design, the fuel pump is installed inside the fuel tank, thereby saving space and simplifying the fuel line system.

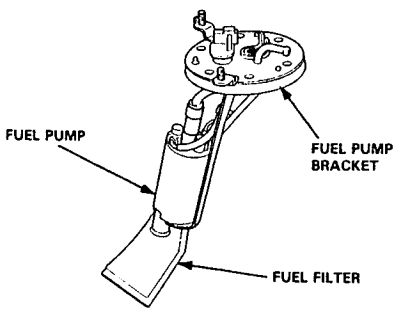

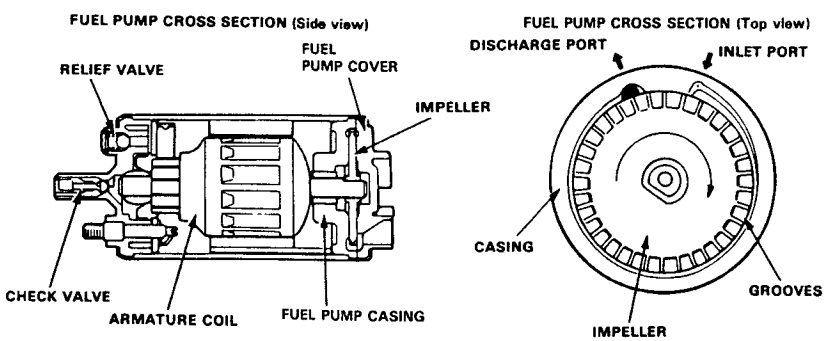

The fuel pump is comprised of a DC motor, a circumference flow pump, a relief valve for protecting the fuel line systems, a check valve for retaining residual pressure, an inlet port, and a discharge port. The fuel pump assembly consists of the impeller (driven by the motor), the fuel pump casing (which forms the pumping chamber), and the pump cover.

OPERATION
(1) When the engine is started, the PGM-FI main relay actuates the fuel pump, and the motor turns the impeler. Differential pressure is generated by the numerous grooves around the impeller.
(2) Fuel entering the inlet port flows inside the motor from the pumping chamber and is forced through the discharge port via the check valve. If fuel flow is obstructed at the discharge side of the fuel line, the relief valve will open to bypass the fuel to the inlet port an prevent excessive fuel pressure.
(3) When the engine stops, the fuel pump stops automatically. However, a check valve closes by spring action to retain the residual pressure in the line, helping the engine to restart more easily.

Testing

WARNING **Do not smoke during the test. Keep open flame away from your work area.**

If you suspect a problem with the fuel pump, check that the fuel pump actually runs; when it is ON, you will hear some noise if you hold your ear near the fuel fill port with the fuel fill cap removed. The fuel pump should run for two seconds when the ignition switch is first turned on. If there is no noise at the fuel fill port, check as follows:

1. Remove the trunk floor (see section 20).
2. Disconnect the 4P connector.

   CAUTION: Be sure to turn the ignition switch OFF before disconnecting the wires.

3. Disconnect the PGM-FI main relay connector and connect the BLK/YEL ⑤ wire and YEL ⑦ wire with a jumper wire.

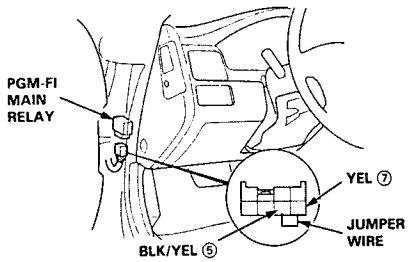

4. Check that battery voltage is available at the fuel pump connector when the ignition switch is turned ON (positive probe to the YEL wire, negative probe to the BLK wire).

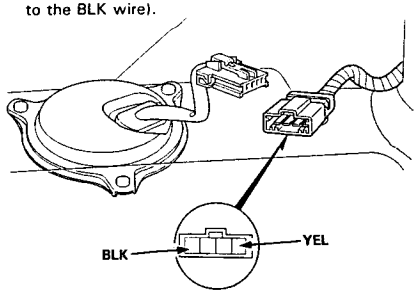

- If battery voltage is available, replace the fuel pump.
- If there is no voltage, check the fuel pump ground and wire harness (see page 11-122).

Replacement

WARNING **Do not smoke while working on fuel system. Keep open flames away from your work area.**

1. Remove the fuel tank (see page 11-124).
2. Disconnect the connector from the fuel pump.
3. Remove the fuel pump mounting nuts.
4. Remove the fuel pump from the fuel tank.

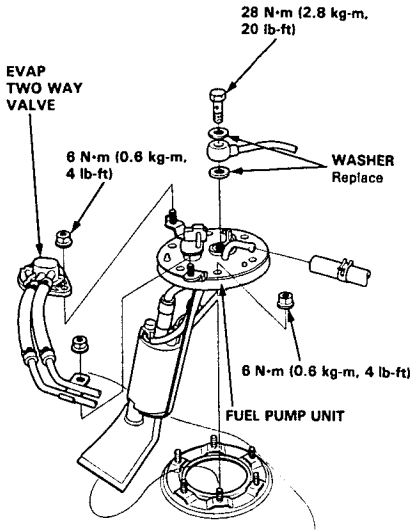

Fuel Supply System

PGM-FI Main Relay

Description

The PGM-FI main relay actually contains two individual relays.
This relay is located at the left side of the cowl.
One relay is energized whenever the ignition is on which supplies the battery voltage to the ECM, power to the fuel injectors, and power for the second relay.
The second relay is energized for two seconds when the ignition is switched on, and when the engine is running which supplies power to the fuel pump.

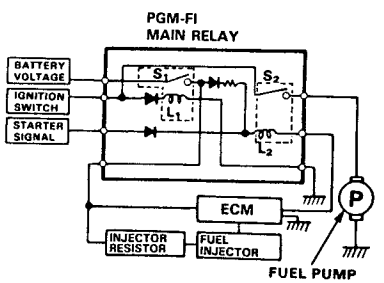

Relay Testing

NOTE: If the car starts and continues to run, the PGM-FI main relay is OK.

1. Remove the PGM-FI main relay.

2. Attach the battery positive terminals to the No. 6 terminal and the battery negative terminal to the No. 8 terminal of the PGM-FI main relay. Then check for continuity between the No. 5 terminal and No. 7 terminal of the PGM-FI main relay.

   - If there is continuity, go on to step 3.
   - If there is no continuity, replace the PGM-FI main relay and retest.

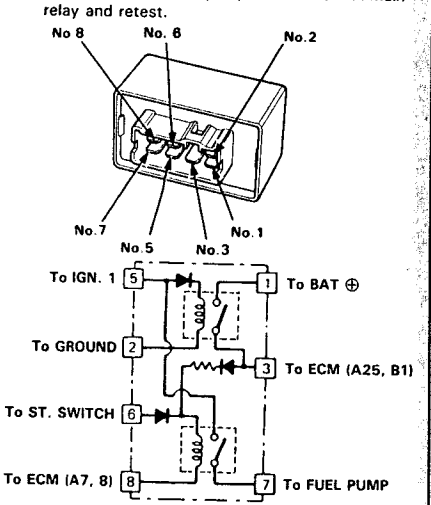

3. Attach the battery positive terminal to the No. 5 terminal and the battery negative terminal to the No. 2 terminal of the PGM-FI main relay. Then check that there is continuity between the No. 1 terminal and No. 3 terminal of the PGM-FI main relay.

   - If there is continuiyt, go on to step 4.
   - If there is no continuity, replace the PGM-FI main relay and retest.

4. Attach the battery positive terminal to the No. 3 terminal and the battery negative terminal to the No. 8 terminal of the PGM-FI main relay. Then check that there is continuity between the No. 5 terminal and No. 7 terminal of the PGM-Fi main relay.

   - If there is continuity, the PGM-FI main relay is OK.
   - If there is no continuity, replace the PGM-FI main relay and retest.

(cont'd)

PGM-FI Main Relay (cont'd)

Troubleshooting Flowchart

- Engine will not start.
- Inspection of PGM-FI main relay and relay harness.

Disconnect the PGM-FI main relay connector.

Check for continuity between BLK terminal ② and body ground.

Is there continuity? — NO → Repair open in BLK wire between PGM-FI main relay and G101 (located at left side of engine).

YES

Measure the voltage between YEL/BLU terminal ① and body ground.

Is there battery voltage? — NO →
- Replace the ECU (ECM) (10 A) fuse in the under-hood fuse/relay box.
- Repair open in the YEL/BLU wire between the PGM-FI main relay and the ECU (ECM) (10A) fuse.

YES

Turn the ignition switch ON.

Measure the voltage between BLK/YEL terminal ⑤ and body ground.

Is there battery voltage? — NO →
- Replace the No. 2 ECU (ECM) (15 A) fuse in the under-dash fuse/relay box.
- Repair open in the BLK/YEL wire between the PGM-FI main relay and the No. 2 ECU (ECM) (15 A) fuse.

YES

Turn the ignition switch to the START position.

Measure the voltage between BLK/WHT terminal ⑥ and body ground.

NOTE:
- M/T: Clutch pedal must be depressed.
- A/T: Transmission in [N] or [P] position.

Is there battery voltage? — NO → Repair open in the BLK/WHT wire between the PGM-FI main relay and the ignition switch.

YES

(To page 11-123)

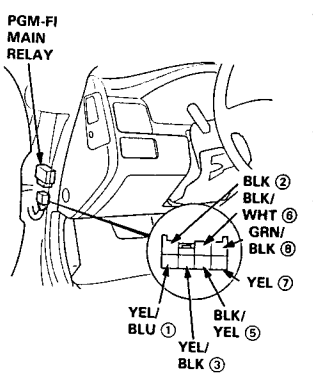

(From page 11-122)

Turn the ignition switch OFF.

Connect the test harness between the ECM and connectors. Disconnect "A" connector from the ECM only, not the main wire harness (see page 11-39).

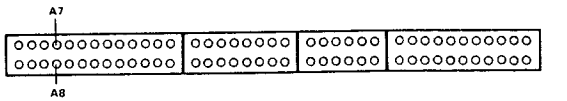

Check for continuity between GRN/BLK terminal ⑧ and the following terminals; A7, A8.

Is there continuity? — NO → Repair open in GRN/BLK wire between ECM (A7, A8) and PGM-FI main relay.

YES

Reconnect "A" connector to the main wire harness.

Connect the PGM-FI main relay connector.

Turn the ignition switch ON.

Measure the voltage between A23 (−) terminal and the following terminals: A25 (+) B1 (+).

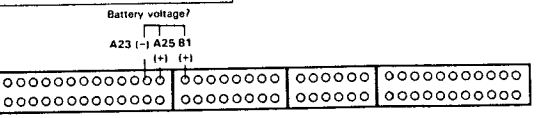

Is there battery voltage? — NO →
- Repair open in the YEL/BLK wire between the ECM (A25, B1) and PGM-FI main relay.
- Replace PGM-FI main relay.

YES

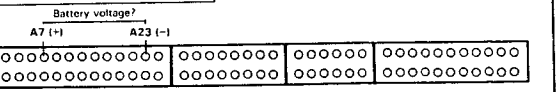

Turn the ignition switch OFF.

Connect a voltmeter between A7 (+) terminal and A23 (−) terminal.

Is there battery voltage for two seconds after the ignition switch is first turned on? — YES → Substitute a known-good ECM and recheck. If prescribed voltage is now available, replace the original ECM.

NO

Check the PGM-FI main relay (see page 11-120).

Fuel Supply System

Fuel Tank

Replacement

⚠ WARNING Do not smoke while working on fuel system. Keep open flame away from your work area.

1. Block front wheels. Jack up the rear of the car and support with jackstands.
2. Remove the drain bolt and drain the fuel into an approved container.
3. Disconnect the 4P connector (located under the trunk floor).

   CAUTION: Be sure to turn the ignition switch OFF before disconnecting the wires.

4. Remove the fuel hose protector.
5. Disconnect the hoses.

   CAUTION: When disconnecting the hoses, slide back the clamps, then twist hoses as you pull to avoid damaging them.

6. Place a jack, or other support, under the tank.
7. Remove the strap bolts, and let the straps fall free.
8. Remove the fuel tank.
   NOTE: The tank may stick on the undercoat applied to its mount. To remove, carefully pry it off the mount.
9. Install a new washer on the drain bolt and the fuel pump line, then install parts in the reverse order of removal.

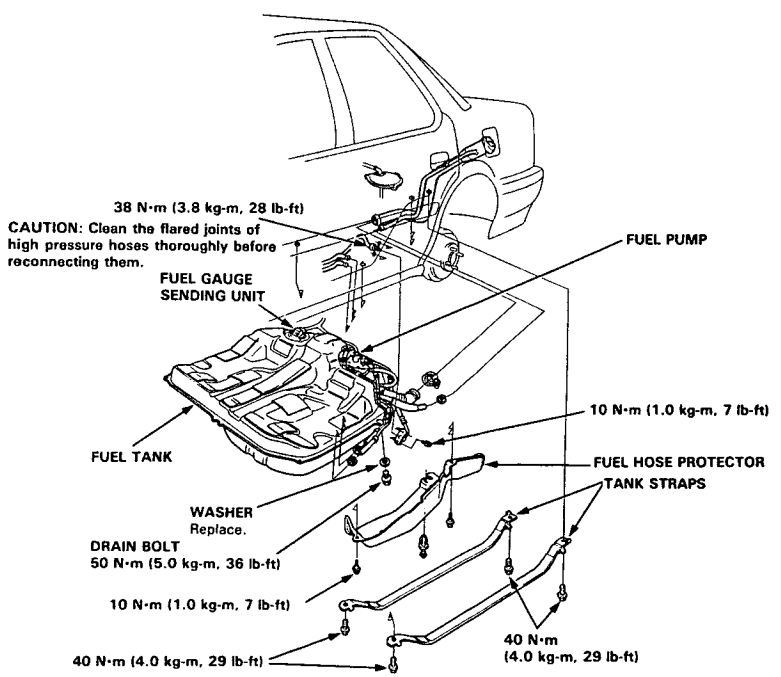

Intake Air System

System Troubleshooting Guide

NOTE: Across each row in the chart, the sub-system that could be sources of a symptom are ranked in the order they should be inspected starting with ①. Find the symptom in the left column, read across to the most likely source, then refer to the page listed at the top of that column. If inspection shows the system is OK, try the next system ②. etc.

PAGE / SUB-SYSTEM	THROTTLE CABLE	THROTTLE BODY	INTAKE AIR BYPASS CONTROL SYSTEM
SYMPTOM	128	129	132
WHEN COLD FAST IDLE OUT OF SPEC	②	①	
WHEN WARM IDLE SPEED TOO HIGH	②	①	
LOSS OF POWER	①		②

Intake Air System

System Description

The system supplies air for all engine needs. It consistes of the intake air pipe, Air Cleaner (ACL), intake air duct, Throttle Body (TB), Idle Air Control (IAC) Valve, fast idle thermo valve, and intake manifold. A resonator in the intake air pipe provides additional silencing as air is drawn into the system.

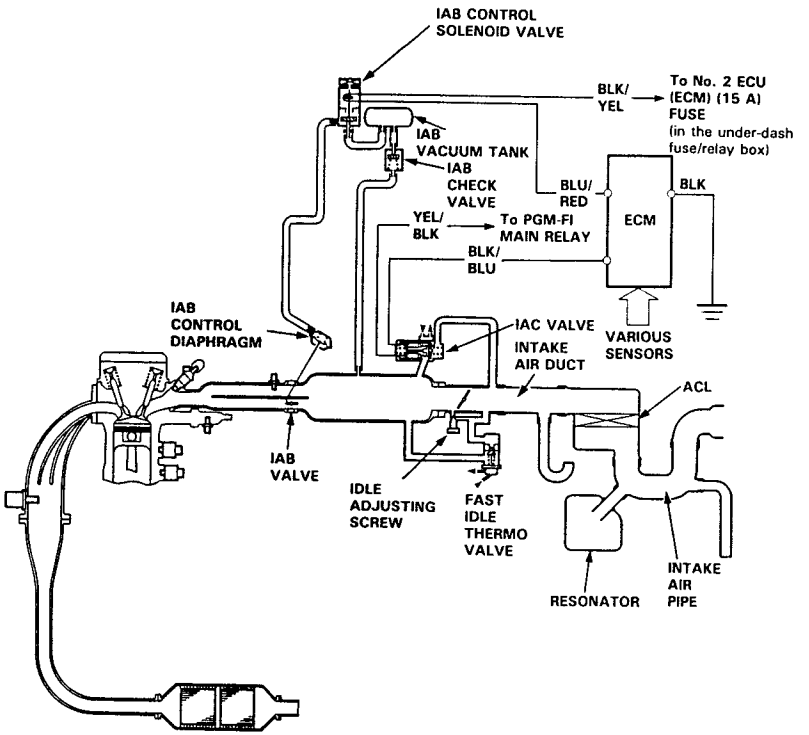

Air Cleaner (ACL)

AIR CLEANER (ACL) Element Replacement

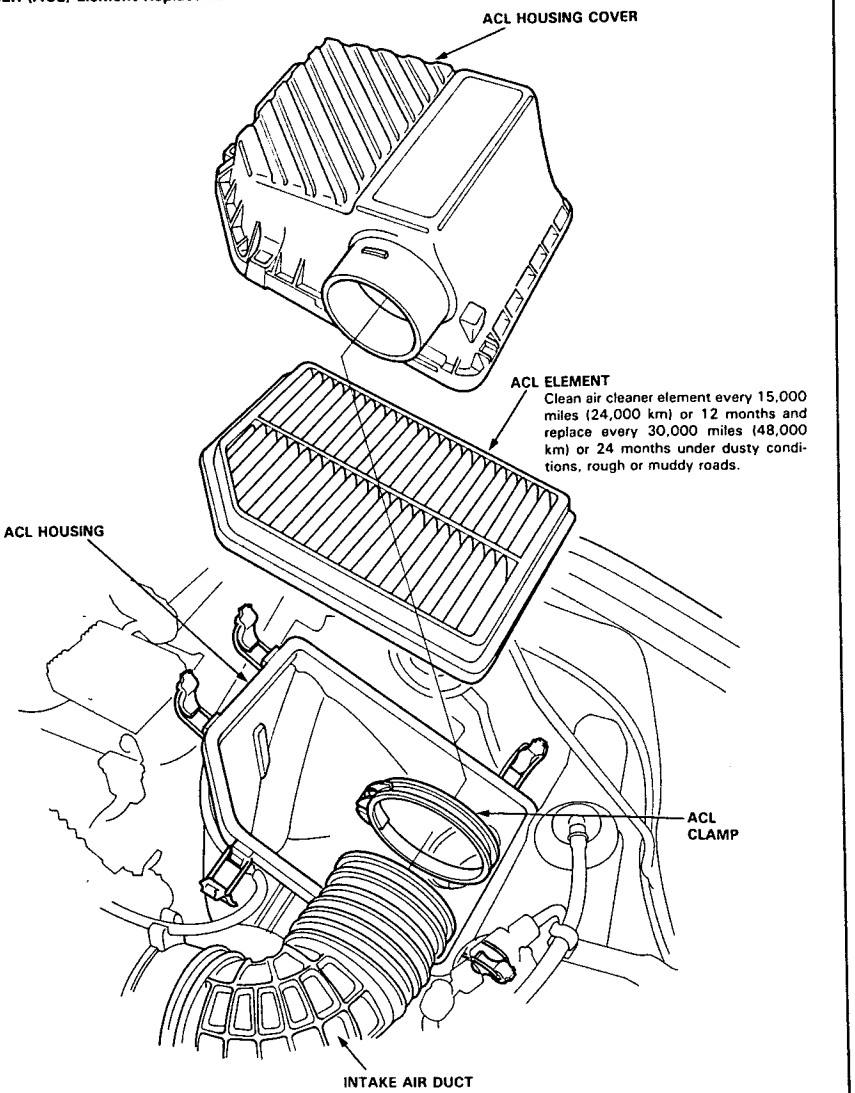

Intake Air System

Throttle Cable

Inspection/Adjustment

1. Warm up the engine to normal operating temperature (the radiator fan comes on).
2. Check that the throttle cable operates smoothly with no binding or sticking. Repair as necessary.
3. Check cable free play at the throttle linkage. Cable deflection should be 10–12 mm (0.39–0.47 in.)

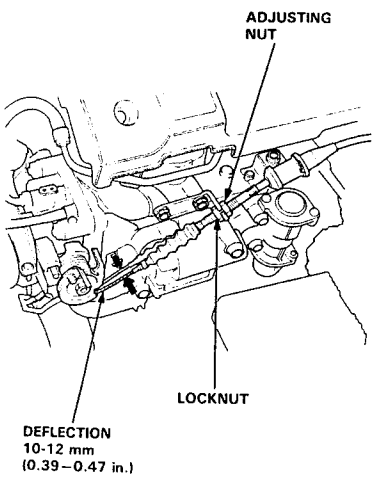

4. If deflection is not within specs, loosen the locknut, turn the adjusting nut until the deflection is as specified, then retighten the locknut.
5. With the cable properly adjusted, check the throttle valve to be sure it opens fully when you push the accelerator pedal to the floor. Also check the throttle valve to be sure it returns to the idle position whenever you release the accelerator pedal.

Installation

1. Fully open the throttle valve, then install the throttle cable in the throttle linkage and install the cable housing in the cable bracket.
2. Warm up the engine to normal operating temperature (the radiator fan comes on).

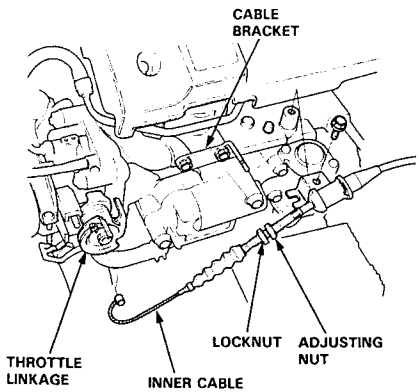

3. Hold the cable sheath, removing all slack from the cable.
4. Turn the adjusting nut until it is 3 mm (0.12 in.) away from the cable bracket.
5. Tighten the locknut. The cable deflection should now be 10–12 mm (0.39–0.47 in.). If not, see inspection/adjustment.

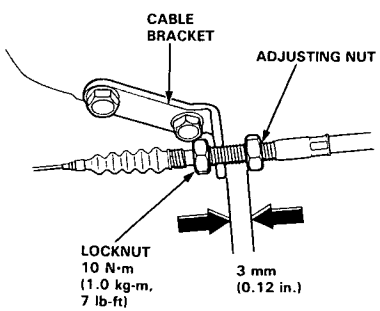

Throttle Body

Description

The throttle body is of the single-barrel side-draft type. The lower portion of the throttle valve is heated by engine coolant which is fed from the cylinder head. The idle adjusting screw which increases/decreases bypass air and the Evaporative Emission (EVAP) Control Canister port are located on the top of the throttle body.

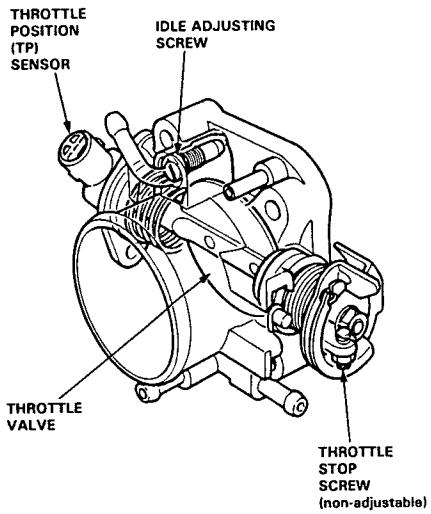

Inspection

CAUTION: Do not adjust the throttle stop screw. It is preset at the factory.

1. Start the engine and allow it to reach normal operating temperature (the radiator fan comes on).
2. Disconnect the vacuum hose (to the EVAP control canister) from the top of the throttle body; connect a vacuum gauge to the throttle body.

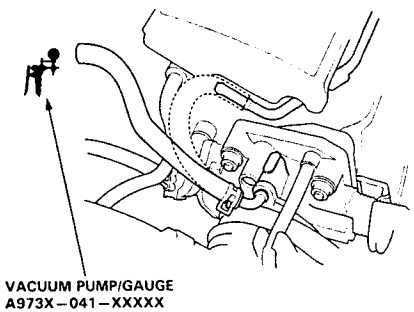

3. Allow the engine to idle and check that the gauge indicates no vacuum.
   - If there is vacuum, check the throttle cable (see page 11-128).
4. Check that vacuum is indicated on the gauge when the throttle is opened slightly from idle.
   - If the gauge indicates no vacuum, check the throttle body port. If the throttle body port is clogged, clean it with carburetor cleaner.
5. Stop the engine and check that the throttle cable operates smoothly without binding or sticking.
   - If there are any abnormalities in the above steps, check for:
     - Excessive wear or play in the throttle valve shaft.
     - Sticky or binding throttle lever at full close position.
     - Clearance between throttle stop screw and throttle lever at full close position.

(cont'd)

Throttle Body (cont'd)

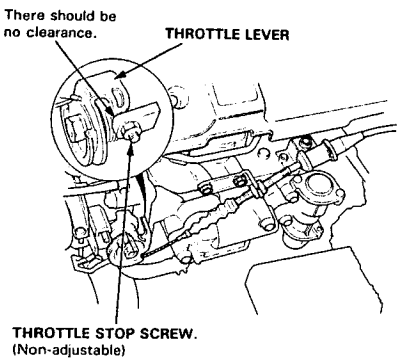

Replace the throttle body if there is excessive play in the throttle valve shaft or if the shaft is binding or sticking.

Throttle Body (cont'd)

Disassembly

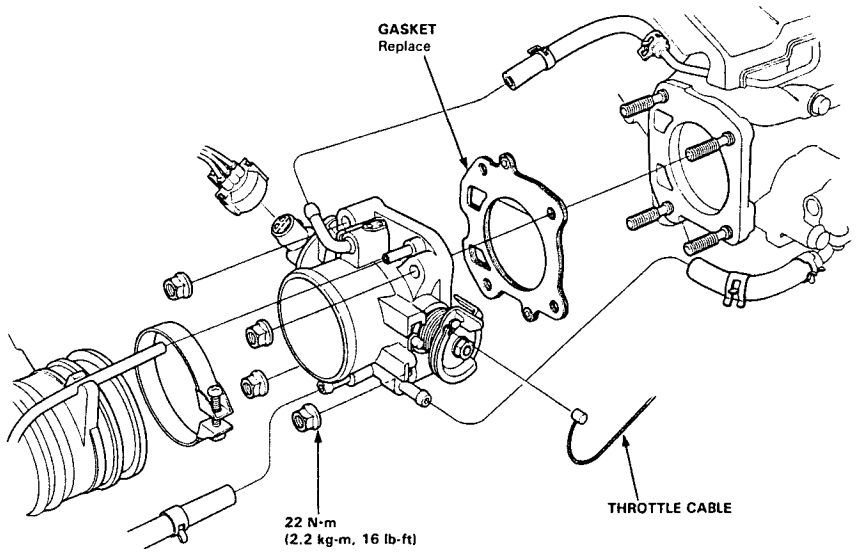

CAUTION:
- The throttle stop screw in non-adjustable.
- After reassembly, adjust the throttle cable (see page 11-128).

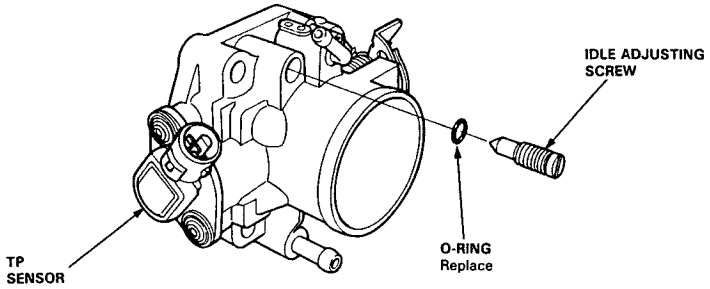

Intake Air System

Intake Air Bypass (IAB) Control System

Description

Two air intake paths are provided in the intake manifold to allow the selection of the intake path most favorable for a given engine speed.
Satisfactory power performance is achieved by closing and opening the Intake Air Bypass (IAB) valves. High torque at low rpm is acheived when the IAB valves are closed, whereas high power at high rpm is achieved when the IAB valves are opened.

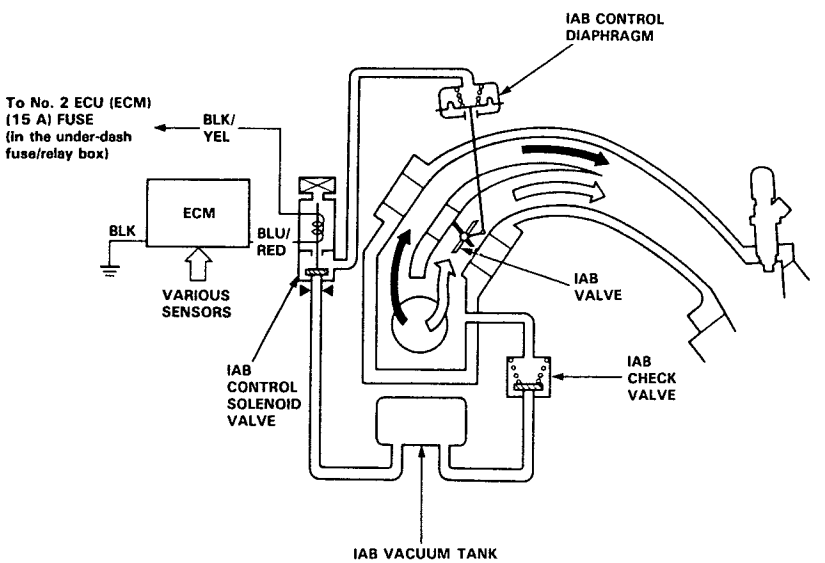

IAB CONTROL SOLENOID VALVE OFF

⇧

ENGINE RPM IS ABOVE 4,900 rpm

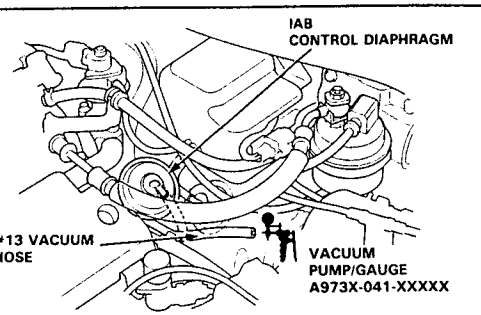

Troubleshooting Flowchart

Inspection of IAB Control System

Start engine and allow to idle.

Remove #13 vacuum hose from the IAB control diaphragm and connect vacuum gauge to the hose.

Is there vacuum ?

- NO → Disconnect the 2P connector from the IAB control solenoid valve.
- YES ↓

Measure voltage between BLK/YEL (+) terminal and BLU/RED (−) terminal.

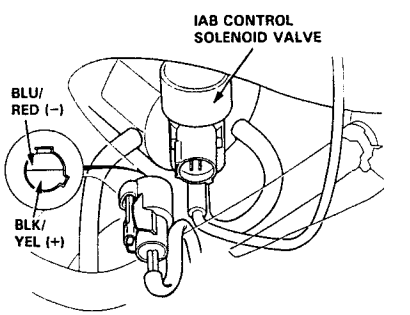

Is there battery voltage ?

- YES → Repair the blockage or vacuum leak between the intake manifold and diaphragm, if vacuum is OK, replace the IAB control solenoid valve.
- NO ↓

Measure voltage between BLK/YEL (+) terminal and body ground.

Is there battery voltage ?

- NO → Repair open in BLK/YEL wire between the 2P connector and No. 2 ECU (ECM) (15 A) fuse in the under-dash fuse/relay box.
- YES ↓

Turn the ignition switch OFF.

(To page 11-134)

(To page 11-134)

(cont'd)

Intake Air System

Intake Air Bypass (IAB) Control System (cont'd)

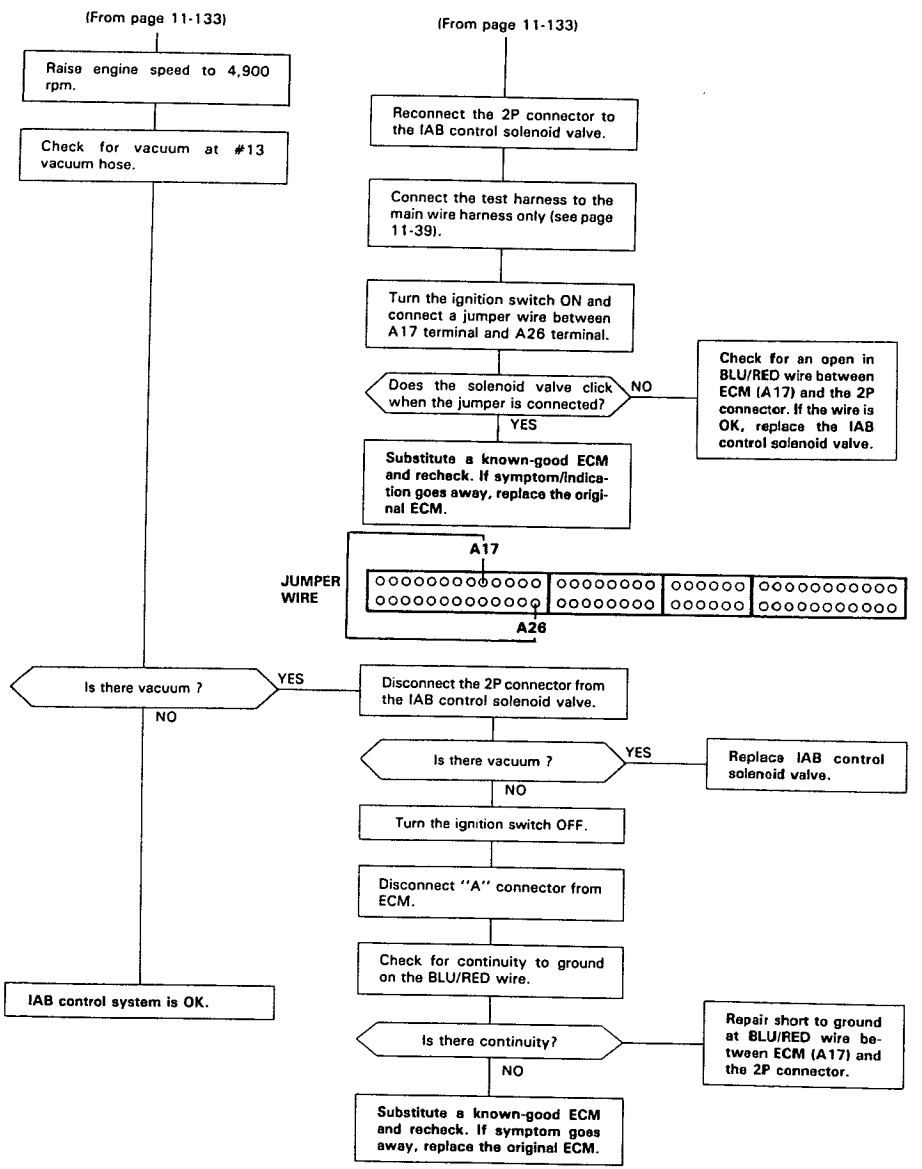

Intake Air Bypass (IAB) Valve Testing

CAUTION: Do not adjust the IAB valve full-close screw. It was preset at the factory.

1. Check the IAB valve shaft for binding or sticking.
2. Check the IAB valve for smooth movement.
3. With the engine off, check that Ⓐ of the bypass valve is in close contact with the stopper.

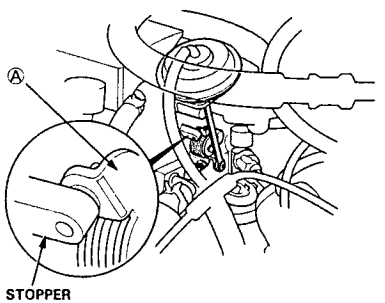

4. With the engine at idle, check that Ⓑ of the IAB valve is in close contact with the full-close screw.

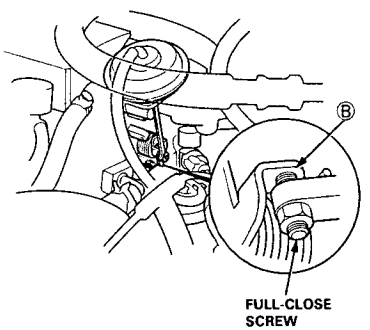

- If any fault is found, clean the linkage and shafts with carburetor cleaner.

– If the problem still exists after cleaning, disassemble the intake manifold and check the IAB valve (see page 11-136).

(cont'd)

Intake Air System

Bypass Control System (cont'd)

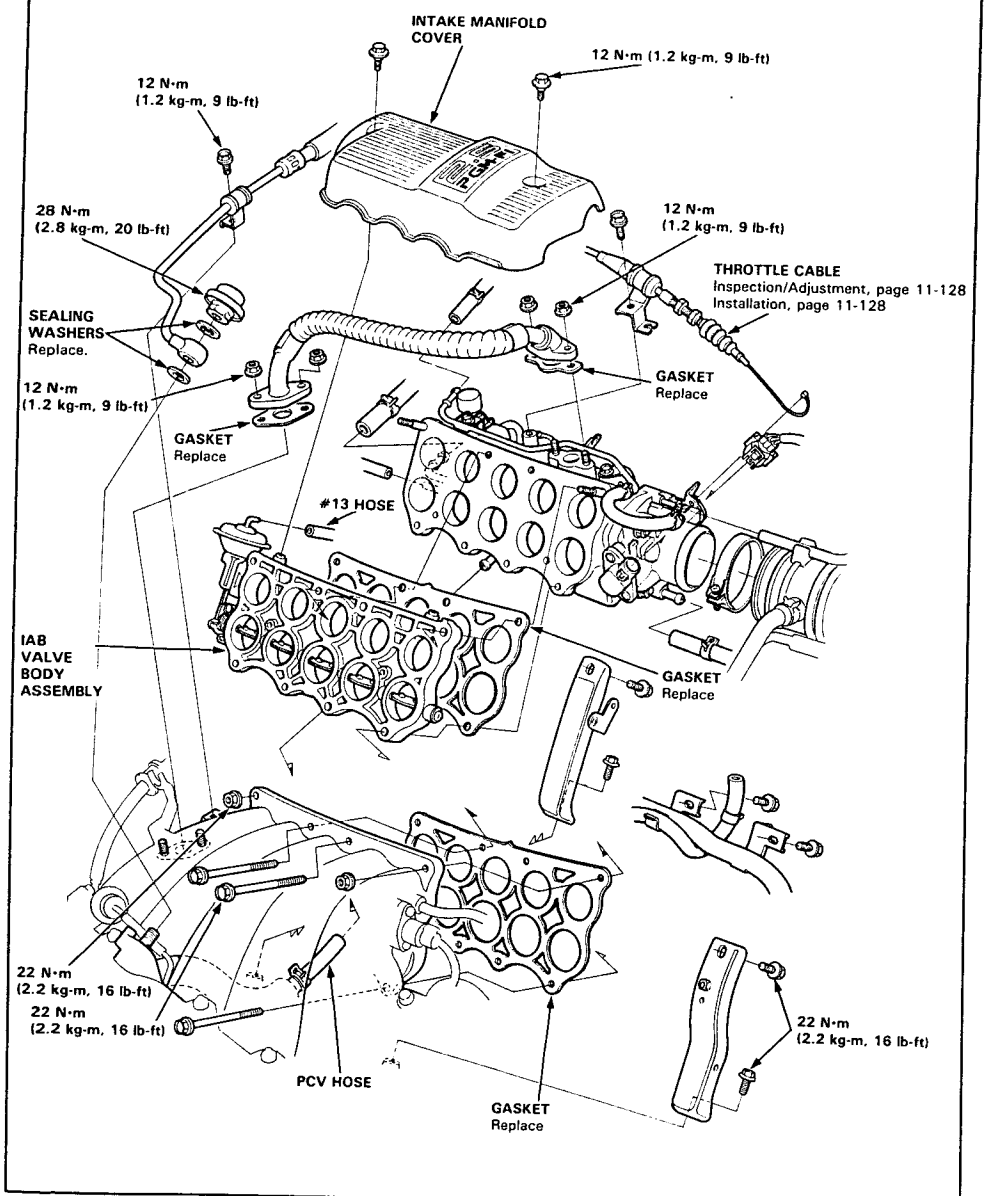

Emission Control System

System Troubleshooting Guide

NOTE: Across each row in the chart, the sub-systems that could be sources of a symptom are ranked in the order they should be inspected starting with ①. Find the symptom in the left column, read across to the most likely source, then refer to the page listed at the top of that column. If inspection shows the system is OK, try the next most likely system ②, etc.

PAGE / SYMPTOM	SUB-SYSTEM	THREE WAY CATALYTIC CONVERTER	EXHAUST GAS RECIRCULATION SYSTEM	POSITIVE CRANKCASE VENTILATION SYSTEM	EVAPORATIVE EMISSION CONTROLS
		139	141	147	148
ROUGH IDLE			①	②	
FREQUENT STALLING	AFTER WARMING UP		①		
POOR PERFORMANCE	MISFIRE OR ROUGH RUNNING		①		
	FAILS EMISSION TEST	①	③		②
	LOSS OF POWER	①	②		

Emission Control System

System Description

The emission control system includes a Three Way Catalytic Converter (TWC), Exhaust Gas Recirculation (EGR) system, Positive Crankcase Ventilation (PCV) system and Evaporative Emission (EVAP) control system. The emission control system is designed to meet federal and state emission standards.

Tailpipe Emission

Inspection

⚠WARNING Do not smoke during this procedure. Keep any open flame away from your work area.

1. Start the engine and warm up to normal operating temperature by driving on the road.
2. Connect a tachometer.
3. Check and adjust the idle speed, if necessary (see page 11-106).
4. Warm up and calibrate the CO meter according to the meter manufacturer's instructions.
5. Check idle CO with the headlights, blower fan,rear window defogger, cooling fan, and air conditioner off.

   CO meter should indicate 0.1 % maximum.

Three Way Catalytic Converter (TWC)

Description

The Three Way Catalytic Converter (TWC) is used to convert hydrocarbons (HC), carbon monoxide (CO), and oxides of nitrogen (NOx) in the exhaust gas to carbon dioxide (CO_2), dinitrogen (N_2) and water vapor.

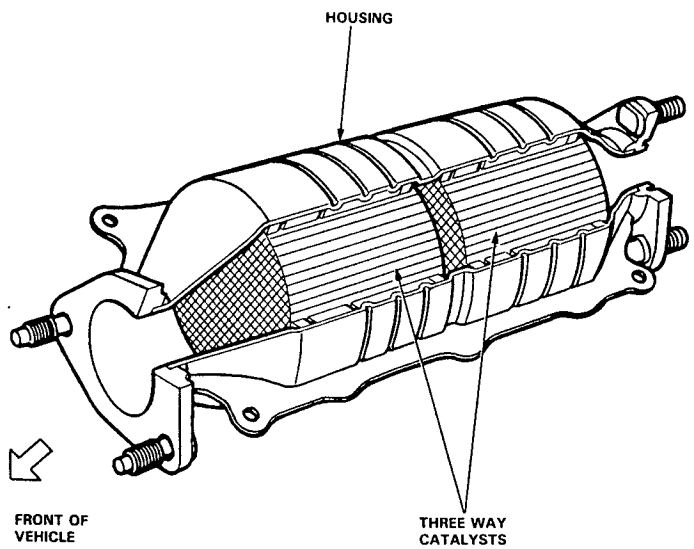

(cont'd)

Emission Control System

- Three Way Catalytic Converter (TWC) (cont'd)

Inspection

If excessive exhaust system back-pressure is suspected, remove the TWC from the car and make a visual check for plugging, melting or cracking of the catalyst. Replace the TWC if any of the visible area is damaged or plugged.

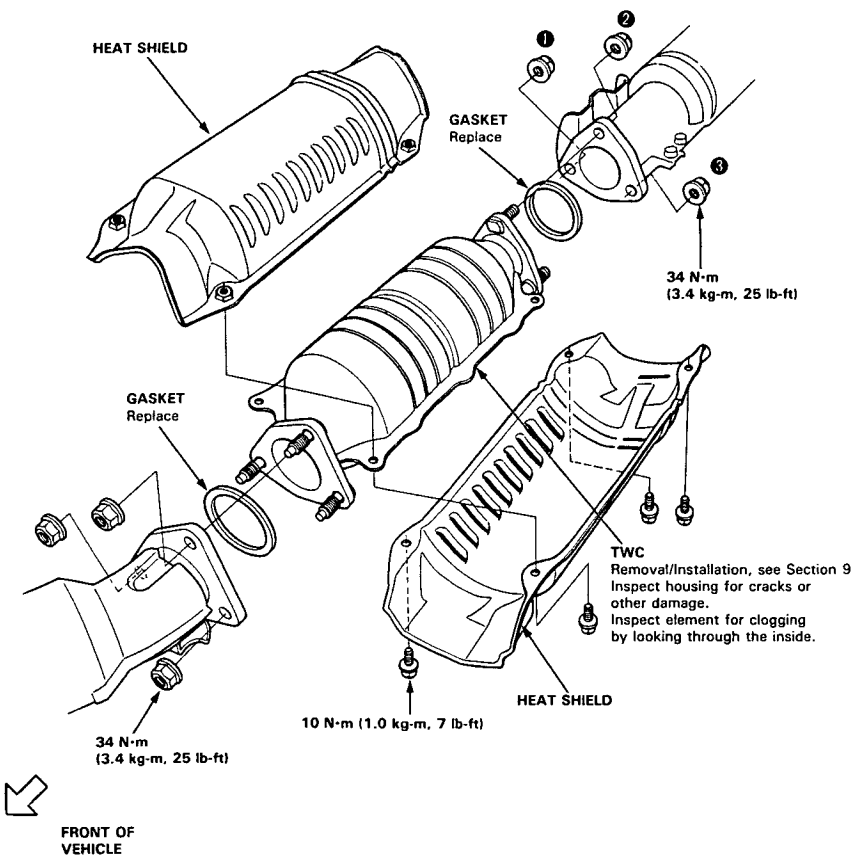

Exhaust Gas Recirculation (EGR) System

Troubleshooting Flowchart

The Malfunction Indicator Lamp (MIL) indicates Diagnostic Trouble Code (DTC) 12: A problem in the Exhaust Gas Recirculation (EGR) system.

The EGR system is designed to reduce oxides of nitrogen emissions (NOx) by recirculating exhaust gas through the EGR valve and the intake manifold into the combustion chambers. It is composed of the EGR valve, EGR vacuum control valve, EGR control solenoid valve, ECM and various sensors.

The ECM memory contains ideal EGR valve lifts for varying operating conditions. The EGR valve lift sensor detects the amount of EGR valve lift and sends the information to the ECM. The ECM then compares it with the ideal EGR valve lift which is determined by signals sent from the other sensors. If there is any difference between the two, the ECM varies current to the EGR control solenoid valve to further regulate vacuum applied to the EGR valve.

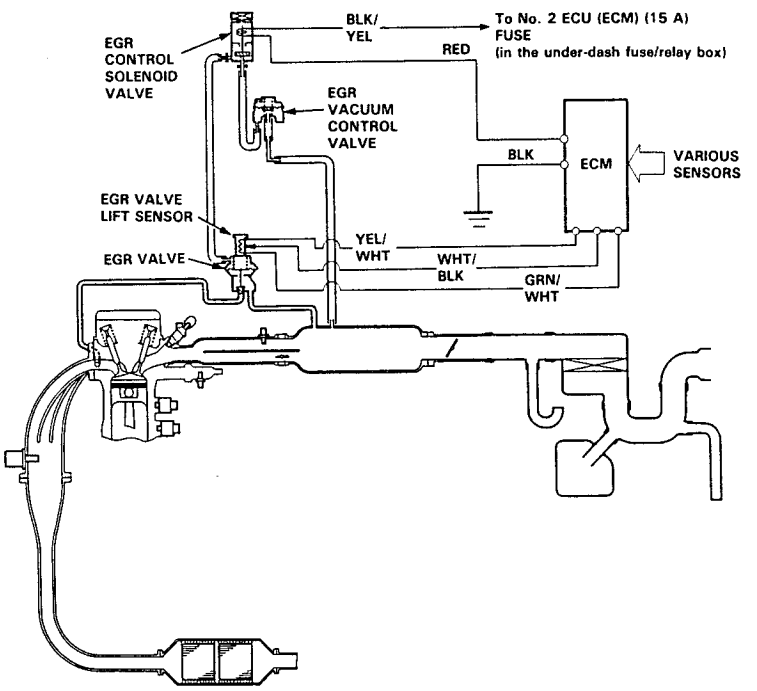

(cont'd)

Exhaust Gas Recirculation (EGR) System (cont'd)

12

- The MIL has been reported on.
- With service check connector jumped (see page 11-36), code 12 is indicated.

Do the ECM Reset Procedure (see page 11-37).

Road test necessary: Warm up the engine to normal operating temperature (the radiator fan comes on).
Drive the car on the road for approx. 10 minutes. Keep the engine speed in the 1,700–2,500 rpm range.

Is the MIL on and does it indicate code 12?

NO → Intermittent failure, system is OK at this time.
Check for poor connections or loose wires at C219 (located under the hood on the front right side of the car), C110 (EGR valve lift sensor), C305 (control box) and ECM.

YES

With the engine at idle, disconnect the #1 hose from the EGR valve and connect a vacuum pump/gauge to the hose.

Is there any vacuum?

YES → Disconnect 4P connector from the control box and check the #1 hose for vacuum again.

NO

Move the vacuum pump/gauge to the EGR valve.

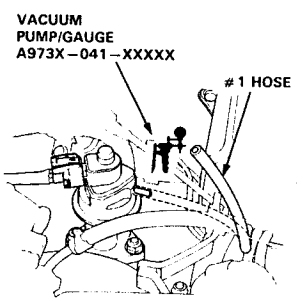

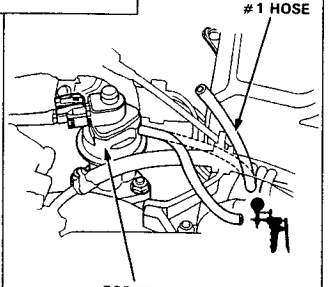

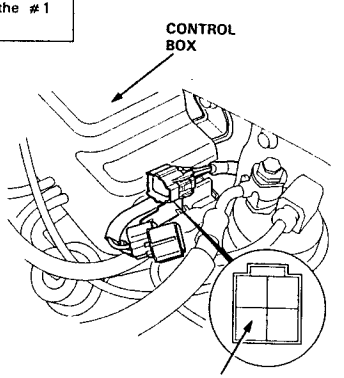

(To page 11-143)

(To page 11-143)

(From page 11-192)

With the engine at idle, apply 150 mm Hg (6 in. Hg) of vacuum to the EGR valve.

Does the engine stall or run rough and does the EGR valve hold vacuum?

NO → Replace the EGR valve.

YES

Turn the ignition switch OFF.

Disconnect the 4P connector from the control box.

Turn the ignition switch ON.

Measure voltage between BLK/YEL (+) terminal on the main wire harness and body ground.

Is there battery voltage?

NO → Repair open in BLK/YEL wire between the EGR control solenoid valve and No. 2 ECU (ECM) (15 A) fuse in the under-dash fuse/relay box.

YES

Reconnect the vacuum pump/gauge to the #1 hose.

Start the engine and allow it to idle.

(To page 11-144)

(From page 11-142)

Is there any vacuum?

YES → Check vacuum hose routing of the entire EGR system. If hose routing is OK, replace EGR control solenoid valve.

NO

Turn the ignition switch OFF and disconnect the "A" connector from the ECM.

Check for continuity to ground on RED wire of 4P connector.

Is there continuity?

YES → Repair short in RED wire between EGR control solenoid valve and ECM (A11).

NO

Substitute a known-good ECM and recheck. If symptom/indication goes away, replace the original ECM.

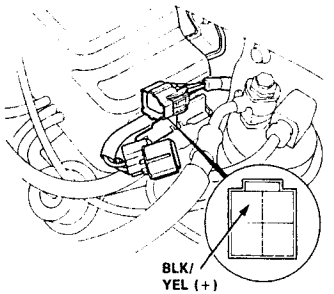

(cont'd)

Exhaust Gas Recirculation (EGR) System (cont'd)

(From page 11-143)

Connect battery power to the B terminal of the 4P connector. While watching the vacuum gauge, ground to the D terminal.

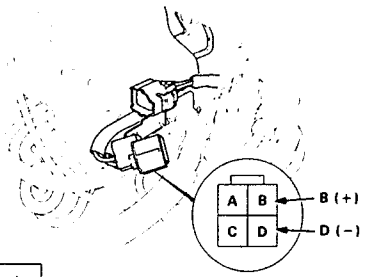

Is there approx. 150 mm Hg (6 in. Hg) within 1 second?

NO → Turn the ignition switch OFF and inspect the #1 and #2 hoses for leaks, restrictions, or misrouting.

YES → Turn the ignition switch OFF and reconnect the 4P connector.

Are the hoses OK?

NO → Correct as necessary.

YES →

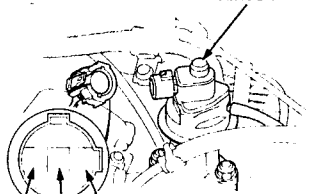

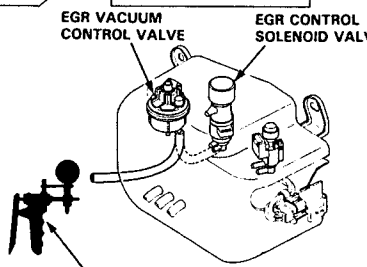

Disconnect the lower hose on EGR control solenoid valve and connect a vacuum gauge to the hose.

VACUUM PUMP/ GAUGE A973X−041−XXXXX

Start the engine and allow it to idle.

Is there approx. 150 mm Hg (6 in. Hg) of vacuum?

NO → Replace the EGR vacuum control valve.

YES → Replace the EGR control solenoid valve.

Disconnect 3P connector from the EGR valve lift sensor.

Turn the ignition switch ON.

Measure voltage between YEL/ WHT (+) terminal and GRN/WHT (−) terminal.

Is there approx. 5 V?

NO → Measure voltage between YEL/ WHT (+) terminal and body ground.

YES

(To page 11-145)

(To page 11-145)

(From page 11-144)

Turn the ignition switch OFF.

Reconnect the 3P connector to the EGR valve lift sensor.

Connect the test harness between the ECM and connectors (see page 11-39).

Turn the ignition switch ON.

Measure voltage between D12 (+) terminal and D22 (−) terminal.

Is the voltage approx. 1.2 V with no vacuum applied and approx. 4.3 V with 150 mm Hg (6 in. Hg) of vacuum applied to the EGR valve?

− Repair open or short in WHT/ BLK wire between EGR valve lift sensor and ECM (D12).
− If wire is OK, replace the EGR valve.

(To page 11-146)

(From page 11-144)

Is there approx. 5 V?

YES → Repair open in GRN/ WHT wire between EGR valve lift sensor and ECM (D22).

NO →

Turn the ignition switch OFF.

Connect the test harness "D" connector to the ECM only, not to the main wire harness (see page 11-39).

Turn the ignition switch ON.

Measure voltage between D20 (+) terminal and D22 (−) terminal.

Is there approx. 5 V?

YES → Repair open in YEL/ WHT wire between EGR valve lift sensor and ECM (D20).

NO → Substitute a known-good ECM and recheck. If prescribed voltage is now available, replace the original ECM.

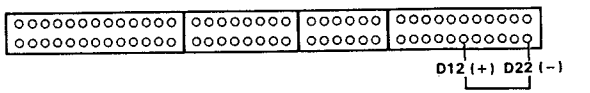

1.2 V with no vacuum applied?
4.3 V with 150 mm Hg (6in. Hg) of vacuum applied?

(cont'd)

Emission Control System

Exhaust Gas Recirculation (EGR) System (cont'd)

(From page 11-145)

Does the voltage consistently increase/decrease as the vacuum increases/decreases?

- NO → Replace the EGR valve.
- YES ↓

Reconnect the #1 hose to the EGR valve.

Start the engine and allow it to idle.

Connect A11 terminal to A26 terminal with a jumper wire.

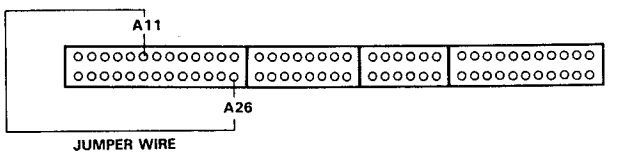

Did the engine stall or run rough?

- NO → Repair open in RED wire between ECM (A11) and EGR control solenoid valve.
- YES ↓

Substitute a known-good ECM and recheck. If symptom/indication goes away, replace the original ECM.

Positive Crankcase Ventilation (PCV) System

Description

The Positive Crankcase Ventilation (PCV) system is designed to prevent blow-by gas from escaping to the atmosphere. The PCV valve contains a spring-loaded plunger. When the engine starts, the plunger in the PCV valve is lifted in proportion to intake manifold vacuum and the blow-by gas is drawn directly into the intake manifold.

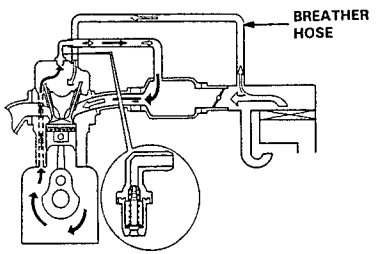

⬅: BLOW-BY VAPOR
⇦: FRESH AIR

Inspection

1. Check the PCV hoses and connections for leaks and clogging.

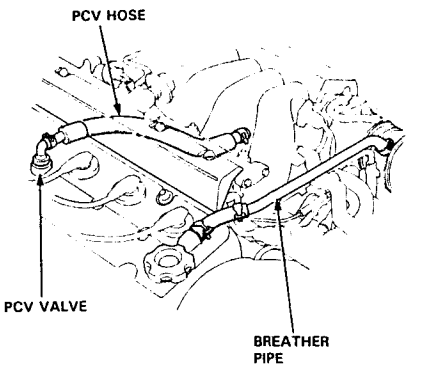

2. At idle, make sure there is a clicking sound from the PCV valve when the hose between PCV valve and intake manifold in lightly pinched with your fingers or pliers.

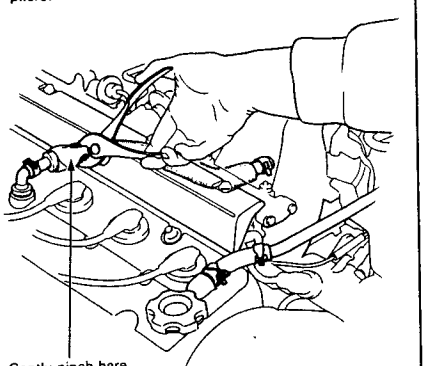

- If there is no clicking sound, check the PCV valve grommet for cracks or damage. If the grommet is OK, replace the PCV valve and recheck.

Emission Control System

Evaporative Emission Controls

Description

The evaporative emission controls are designed to minimize the amount of fuel vapor escaping to the atmosphere. The system consists of the following components:

A. **Evaporative Emission (EVAP) Control Canister**
The EVAP control canister is used for the temporary storage of fuel vapor until the fuel vapor can be purged from the EVAP control canister into the engine and burned.

B. **Vapor Purge Control System**
The EVAP control canister purging is accomplished by drawing fresh air through the EVAP control canister and into a port on the throttle body. The purging vacuum is controlled by the EVAP purge control diaphragm valve and the EVAP purge control solenoid valve.

EVAP PURGE CONTROL SOLENOID VALVE OFF AFTER STARTING ENGINE

↑

ENGINE COOLANT TEMPERATURE ABOVE 158°F (70°C)

C. **Fuel Tank Vapor Control System**
When fuel vapor pressure in the fuel tank is higher than the set value of the EVAP two way valve, the valve opens and regulates the flow of fuel vapor to the EVAP control canister.

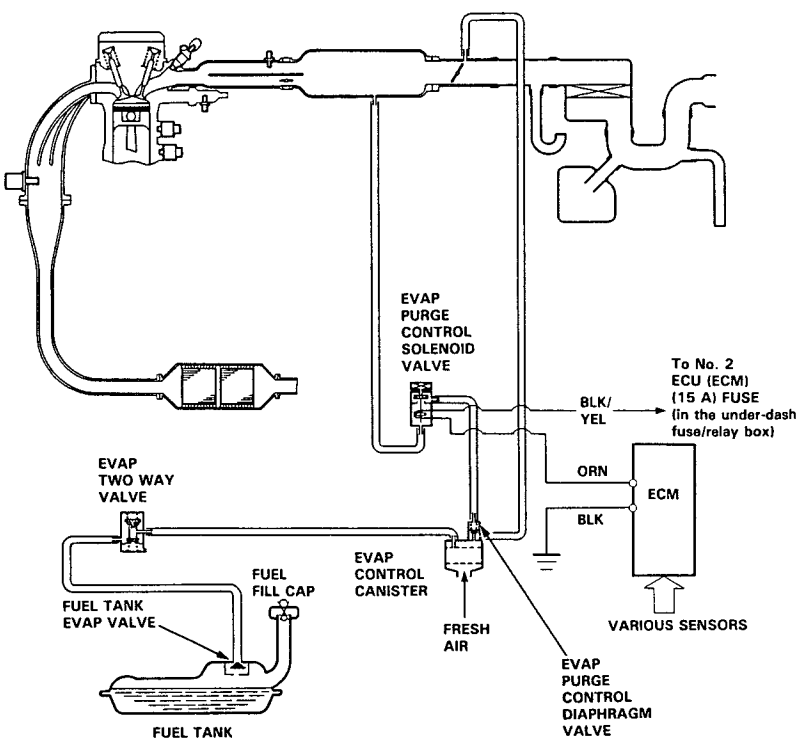

(cont'd)

Evaporative Emission Controls (cont'd)

Troubleshooting Flowchart

Inspection of Evaporative Emission Controls

Disconnect #3 vacuum hose from the EVAP purge control Diaphragm valve (on the EVAP control canister) and connect a vacuum gauge to the hose.

Start the engine and allow it to idle.
NOTE: Engine coolant temperature must be below 158°F (70°C).

Is there vacuum ?
- YES → Disconnect the 2P connector from the EVAP purge control solenoid valve.
- NO → (To page 11-151)

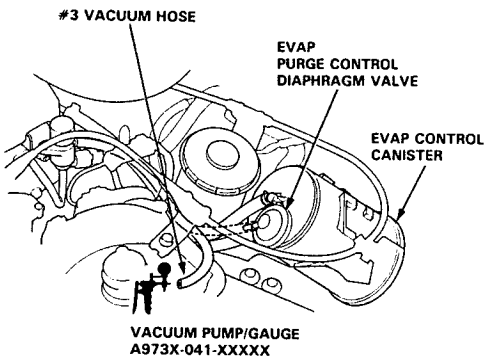

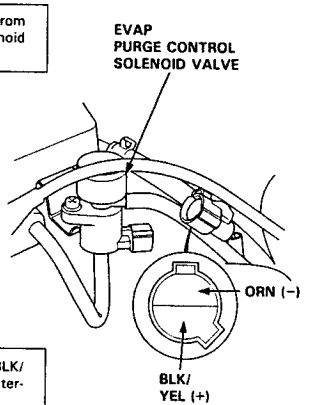

Measure voltage between BLK/YEL (+) terminal and ORN (−) terminal.

Is there battery voltage ?
- YES → Inspect vacuum hose routing. If OK, replace the EVAP purge control solenoid valve.
- NO → Measure voltage between BLK/YEL (+) terminal and body ground.

(To page 11-151)

(From page 11-150)

Warm up the engine to normal operating temperature (the radiator fan comes on).

Check for vacuum at #3 vacuum hose after starting the engine.

Is there manifold vacuum?
- NO → Disconnect the 2P connector.
  - Is there manifold vacuum?
    - NO → Inspect vacuum hose routing. If OK, replace EVAP purge control solenoid valve.
    - YES → Inspect for a short in ORN wire between ECM (A 10) and the 2P connector. If wire is OK, substitute a known-good ECM and recheck. If symptom goes away, replace the original ECM.
- YES → Reconnect the hose.

Remove fuel fill cap

(To page 11-152)

(From page 11-150)

Is there battery voltage ?
- NO → Repair open in BLK/YEL wire between No. 2 ECU (ECM) (15 A) fuse in the under-dash fuse/relay box and the 2P connector.
- YES → Inspect ORN wire for an open to body ground between ECM (A 10) and the connector. If wire is OK, substitute a known-good ECM and recheck. If symptom goes away, replace the original ECM.

(cont'd)

(From page 11-151)

Connect a vacuum gauge to EVAP control canister purge air hose.

Start the engine and raise speed to 3,500 rpm.

Does vacuum appear on gauge within 1 minute ?

NO → Connect a vacuum gauge to the purge hose and raise the engine speed to 3,500 rpm.

YES → **See EVAP two way valve test to complete. Evaporative emission controls are OK.**

Does vacuum appear on the gauge?

NO → **Inspect the purge hose and throttle body port for pinch or blockage.**

YES → **Replace the EVAP control canister.**

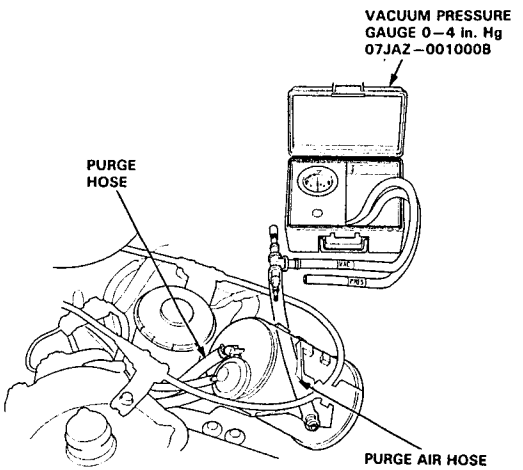

Evaporative Emission (EVAP) Two Way Valve Test

1. Remove the fuel fill cap.
2. Remove vapor line from the fuel tank and connect to T-fitting from vacuum gauge and vacuum pump as shown.

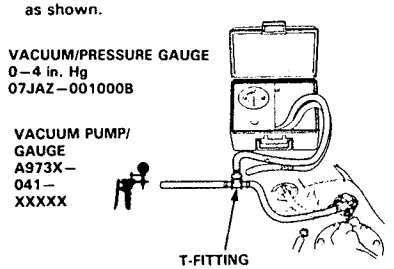

3. Apply vacuum slowly and continuously while watching the gauge.

   Vacuum should stabilize momentarily at 5 to 15 mmHg (0.2 to 0.6 in. Hg).
   - If vacuum stabilizes (valve opens) below 5 mmHg (0.2 in. Hg) or above 15 mmHg (0.6 in. Hg), install new valve and retest.
4. Move vacuum pump hose from vacuum to pressure fitting, and move vacuum gauge hose from vacuum to pressure side as shown.

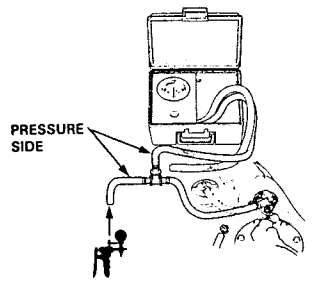

5. Slowly pressurize the vapor line while watching the gauge.

   Pressure should stabilize at 10 to 35 mmHg (0.4 to 1.4 in. Hg).
   - If pressure momentarily stabilizes (valve opens) at 10 to 35 mmHg (0.4 to 1.4 in. Hg), the valve is OK.
   - If pressure stabilizes below 10 mmHg (0.4 in. Hg) or above 35 mmHg (1.4 in. Hg), install a new valve and retest.